Serial Commands Directory

Command:AALIGN (AA)

MS2000 or RM2000 syntax

Shortcut	AA
Format	AALIGN [axis] = [alignment]...
Units	0-99, hardware potentiometer value

Tiger syntax

Shortcut	AA
Format	AALIGN [axis] = [alignment]...
Units	0-99, hardware potentiometer value
Type	Axis-Specific

Adjusts the drive strength by writing to a non-volatile on-board potentiometer. Normally done once at the factory (to a very conservative value) and never adjusted again. If the AA is off, the stage may be sluggish (too low) or it may oscillate, buzz, or sound like it's grinding (too high).

Note: After changing the AA value the AZERO (AZ) command should be run until zeroed.

To optimize stage performance a high AA is desirable, but too high and there are big problems. AA can be increased until oscillations occur and then decreased by 1 or 2 as described at the page on tuning stages to minimize move time.

Warning! The stage may move when the **AALIGN (AA)** command is sent.

Example

```
AA X? Y? Z?
:A X=83 Y=78 Z=59
```

Queries the current AA parameters.

```
AA X=85
:A
```

Sets the X axis potentiometer to 85. The AZERO command should now be run until zeroed.

Command:ACCEL (AC)

MS2000 or RM2000 syntax

Shortcut	AC
Format	ACCEL [axis] = [time in ms]...
Units	Milliseconds
Remembered	Using SS Z

Tiger syntax

Shortcut	AC
Format	ACCEL [axis] = [time in ms]...
Units	Milliseconds
Type	Axis-Specific
Remembered	Using [addr#]SS Z

This command sets the amount of time in milliseconds that it takes an axis motor speed to go from stopped to the maximum speed (S command) during commanded moves long enough that the maximum speed is reached. It is also the duration of the deceleration / ramp-down time at the end of the move.

Setting the acceleration time to less than the motor's intrinsic time constant (~7 ms for the most common motors) is generally foolish. Overly-aggressive acceleration times lead to performance degradation over millions of moves. 25 ms acceleration time is generally only safe for short moves with small stages (i.e. when maximum speed is never reached, see section on small moves) and/or when the speed setting is a small fraction of the maximum. Larger values, e.g. 75ms or 100ms, are recommended for larger stages and/or long moves (where the speed is reached) with speed settings near the maximum, especially in heavy use applications. For stages with very coarse leadscrews and/or very heavy loads it is possible that the stage will not be able to keep up with very short acceleration times; when this happens the error buffer will have errors in the 90s.

Example

```
AC X=50 Y=50 Z=50
:A
AC X? Y? Z?
:X=50 Y=50 Z=50 A
```

The command in this example will make the controller take 50 milliseconds to accelerate the motors on each axis during a move command. When the controller gets within 50 milliseconds of finishing the move, it will begin to decelerate the motors back down to the start velocity where the pulses take over to bring the axes within the pulse crossover position error.

Command:AFADJ (AFJ)

MS2000 and RM2000 Syntax

Shortcut	AFJ *requires v9.60*
Format	AFADJ [X=zero pot value] [Y=video amplitude value] [Z=value]
Units	Integer
Remembered	Using SS Z

Tiger Syntax

Shortcut	AFJ *requires v3.61 (Tiger Comm)*
Format	[Addr#]AFADJ [X=zero pot value] [Y=video amplitude value] [Z=value]
Units	Integer
Type	Card-Addressed
Remembered	Using [Addr#]SS Z

X & **Y** values range between `0 and 100`. Y determines amplitude of the video signal entering the system. Setting a 0 value attenuates a video signal completely, while a setting of 100 lets the full signal go through. Attenuating a video signal also reduces the noise in the signal. If the focus value on the LCD reads `2047`, then the system is saturated with too much signal, try reducing the **Y** value.

X is the zeroing potentiometer; the value of X should be set such that, when **Y** is `0`, the *focus value* is also `0000` (or as close as possible).

Z sets the gain of the final Analog to Digital Converter (ADC) in the auto-focus system. Range: `0 to` 3. By adjusting this setting, a *focus value* for a sparse sample can be magnified to get better focus. If an incorrect value of gain is used, the ADC saturates and the focus value reaches `2047`. Upon system restart, the setting returns to its default value of 0. Perform an SS Z command to save the current gain setting in non-volatile memory.

AFADJ	GAIN
Z=0	1x
Z=1	2x
Z=2	4x
Z=3	8x

Response

:A or Error Reply

Example

```
AFADJ X=15 Y=95
:A<CR><LF>
```

```
AFADJ
```

```
:N-3
```

(Error indicates missing arguments)

```
AFADJ X=1000 Y=-12 Z=4
:N-4
```

(Error indicates arguments out of range)

```
AFADJ X=20 Y=90
:N-5
```

(Error indicates operation failed, try entering one argument at a time)

```
AFADJ X? Y?
:A X=20 Y=95
```

Command:AFCALIB (AFC)

MS2000 and RM2000 Syntax

Shortcut	AFC
Format	AFCALIB [X=contrast] [Y=frame offset] [F=switch axis]
Units	Integer
Remembered	Using SS Z

Tiger Syntax

Shortcut	AFC
Format	[Addr#]AFCALIB [X=contrast] [Y=frame offset] [F=switch axis]
Units	Integer
Type	Card-Addressed
Remembered	Using [Addr#]SS Z

The command without arguments will initiate series of auto-focus scans and selects various internal parameters for best focus value. Parameters changed by `AFCALIB` are the *Highlighted Area* (`AFLIM`), *Zero Adjust* (`AFADJ`), and *ADC Gain* (`AFADJ`). On some focus controllers, the `AFCALIB` routine can also be activated by holding down the `HOME button` for longer than 3 seconds. The `AFCALIB`'s auto-calibration scans use the same speed and travel distance value that were set by the'' AFOCUS'' command. **NOTE:** Please use the `HALT` command or the \ to cancel an auto calibration – any other method may stop the move but may corrupt your settings.

X: Sets the minimum *contrast* value. During an auto-focus run, if the controller finds the difference between the maximum and minimum *focus value* to be less than the contrast value, it declares the run a failure and returns to the starting position. Default value is `10`.

Y: *Frame Offset*, a floating-point constant that maps to a time interval. Changing this number alters the sharpness of focus. The default values are 3.5 for motor driven focus drives, and 3.75 for piezo

driven focus drives. This setting compensates for time lags inherent to the video processing.

F: *Switch Axis*; if your focus controller can control two focus axes, e.g., a motorized drive and a piezo drive, then you may have the option to choose which axis to use for auto-focusing. Every axis that the focus controller controls is assigned a number starting from zero. Check with ASI to determine if this option is available for your system and to get the number for each axis.

Executing AFC alone will begin the Auto Calibration routine. Using AFC with arguments will only set or read back those parameters.

Response

:A or Error Reply

If the **X**, **Y** and **F** arguments are omitted, then an A is returned after the calibration is complete.

Example

```
AFC
:A<CR><LF>
```

```
AFC X=8 Y=3.75
:A
```

```
AFC X?
:X=8 A
```

AFC
Returns an :A after operation is complete, an :N-5 if the operation failed, or an :N-50 if the focus drive's clutch is disengaged (if applicable).

Command:AFHOLD (AFH)

MS2000 or RM2000 syntax

Shortcut	AFH *requires v9.60*
Format	AFHOLD [X=hold_tol] [Y=focus_dz]
Units	Millimeters
Remembered	Using SS Z

Tiger syntax

Shortcut	AFH *requires v3.61 (Tiger Comm)*
Format	[addr#]AFHOLD [X=hold_tol] [Y=focus_dz]
Units	Millimeters
Type	Card-Addressed

Remembered	Using [addr#]SS Z

Set the hold tolerance and the focus dz for video auto focus.

No Arguments: The command starts the auto focus routine.

X: `[hold_tol]` Sets the `hold_tol` parameter.

Y: `[focus_dz]` Sets the `focus_dz` parameter.

Command:AFINFO (AFI)

MS2000 and RM2000 Syntax

Shortcut	AFI *requires v9.60*
Format	AFINFO
Firmware Required	8.8a

Tiger Syntax

Shortcut	AFI *requires v3.61 (Tiger Comm)*
Format	[Addr#]AFINFO
Type	Card-Addressed
Firmware Required	3.27

The `AFINFO` command is a diagnostic command that displays information about autofocus.

It also displays the maximum focus value found during last autofocus run (`Best Focus`), the original location (`Preoffset`), and the location after the frame offset was applied (`Afteroffset`).

Example

```
AFINFO
Best Focus:587
Position Preoffset:   0.0002 mm Afteroffset:  -0.0003 mm
Speed :  1   [AF X]
Travel:0.025000 [AF Y]
Frame Offset:3.500000 [AFC Y]
Hill Offset:70 [AF F]
Contrast:10 [AFC X]
Window Size X:98 Y:98 [AL X Y]
Zero ADJ X:50 Y:90 [AFJ X Y]
ADC Gain:0  [AFJ Z]
<LF>
```

If the line has square brackets, you can change the parameters with the command inside the brackets: AF, AFC, AL, or AFJ.

If the SAVE_SPACE firmware module is included, it will only display `Best Focus`, `Position Preoffset` and `Position Afteroffset`.

```
Best Focus:587
Position Preoffset:   0.0002 mm Afteroffset:  -0.0003 mm
```

Command:AFLIM (AL)

For CRISP

MS2000 and RM2000 Syntax

Shortcut	AL
Format	AFLIM [X=Log_amp_AGC] [Y=LED_intesity_pot] [Z=in_focus_mm]
Remembered	Using SS Z

Tiger Syntax

Shortcut	AL
Format	[Addr#]AFLIM [X=Log_amp_AGC] [Y=LED_intesity_pot] [Z=in_focus_mm]
Type	Card-Addressed
Remembered	Using [Addr#]SS Z

X/Y: The X and Y arguments of this command to directly read and write values (0 to 255) to the CRISP electronics digital potentiometers. Not recommended for use with host software.

- See the LK M command to adjust the LogAmp_AGC instead of AL X.
- See the UL X command to adjust the LED intensity instead of AL Y.

Z `[in_focus_mm]`: The Z-argument specifies the focus precision (in millimeters) when the lock state changes from K or k to F. Useful for automatic checking of desired focus stability. Also useful to enforce a tighter or looser focus state before indicating a lock condition. Note that this value is overwritten whenever the NA of the objective is specified via the LR Y command as of November 2015.

For Video Autofocus

MS2000 and RM2000 Syntax

Shortcut	AL
Format	AFLIM [X= x-axis highlight] [Y= y-axis highlight] [Z= safety limit enable]
Remembered	Using SS Z

Tiger Syntax

Shortcut	AL
Format	[Addr#]AFLIM [X= x-axis highlight] [Y= y-axis highlight] [Z= safety limit enable]

Type	Card-Addressed
Remembered	Using [Addr#]SS Z

X/Y: The X and Y values set the length and breadth of the Sampled/Highlighted Video area. Range is 0 to 100, with the value of 0 covering 0% of the video frame and 100 covering 90% of video frame.

Z: The Z value enables or disables the 200 µm safety limit described in the AUTOFOCUS OPERATION section on page 4. Setting safety limit enable = 1 enables the safety limit; safety limit enable = 0 disables the safety feature. The default value is 1.

Warning! Disabling the safety limit could result in damage to your optics, your sample, or your focus drive.

```
AL X=80 Y=50 Z=1
:A<CR><LF>
```

```
AL
:N-3
```

Error indicates missing arguments

```
AL X=1000 Y=-12
:N-4
```

Error indicates arguments out of range

```
AL X=90 Y=90
:N-5
```

Error indicates operation failed, try entering one argument at a time

```
AL X? Y? Z?
:A X=80 Y=50 Z=1
```

Command:AFMOVE (AM)

MS2000 and RM2000 Syntax

Shortcut	AM
Format	AFMOVE [X=0 or 1] [Y=0 or 1]
Units	integer code (0 or 1)
Remembered	Using SS Z

Tiger Syntax

Shortcut	AM
Format	[Addr#]AFMOVE [X=0 or 1] [Y=0 or 1]
Units	integer code (0 or 1)
Type	Card-Addressed
Remembered	Using [Addr#]SS Z

At this time this Autofocus 2 feature isn't supported on Tiger controllers.

A mode command that influences subsequent commanded moves. If X=1, then upon completion of a commanded XY move (MOVE and MOVREL), for example, MOVE X=123 Y=456 , a multi-axis controller will then automatically initiate an auto-focus.

Y=1 enables the SAFE_TURRET module. Y=0 disables it.

Response

:A or Error Reply.

Example

```
AM X=1
:A<CR><LF>
```

```
AM X?
:A X=1
```

Command:AFOCUS (AF)

MS2000 and RM2000 Syntax

Shortcut	AF
Format	AFOCUS X= [% of speed] Y= [travel distance in mm] Z= [Hill Detect enable] F= [Hill Offset]
Remembered	Using SS Z

Tiger Syntax

Shortcut	AF
Format	[Addr#] AFOCUS X= [% of speed] Y= [travel distance in mm] Z= [Hill Detect enable] F= [Hill Offset]
Type	Card-Addressed
Remembered	Using [Addr#]SS Z

The AFOCUS command will invoke an auto-focus routine using the *speed* and *travel* range specified by the previously set **X** and **Y** parameter settings. This routine can also be activated by pressing **"@"** button on most controllers. Entering AF without arguments will initiate the auto-focus routine itself, whereas issuing an AF with arguments will only set the parameters. An auto-focus scan can be canceled with HALT command or by issuing the \ shortcut. When an AF command is issued, the controller only replies after the operation is complete. It returns a `:A[###]` if the operation was successful, or `N-5` if there was an error.

**X= ** Speed. Range is 0 to 100 denoting the percentage of the focus drive's maximum possible speed to travel during an auto-focus scan. This speed is also used by the AFCALIB (or AFC) command.

Y= Total scan range in millimeters. The focus controller moves down one-half this travel distance, and then scans up the full travel distance. This range is also used by AFCALIB (or AFC) command.

Z= Search type; either 0 or 1. A value of 0 enables *Normal* mode, while a 1 enables Hill Detect mode. (Z values 2 and 3 are reserved for future use.)

F= Hill Offset. Range is 0 to 100 denoting a percentage of a hill. If the Search Type is Hill Detect, then this setting determines when the scan will end. Once a hill peak is detected, the scan will terminate when past the peak by the *Hill Offset* percentage value.

Response

:A or Error Reply.

Example

```
AF
:A<CR><LF>
```

```
AF X=5 Y=0.1 Z=0
:A
```

```
AF X=10 Y=0.3 Z=1 F=10
:A
```

```
AF X=200 Z=2
:N-4
```

(Error indicates arguments out of range)

```
AF X?
:X=10 A
```

AF
Returns :A [quality#] after operation is complete, an :N-5 if the operation failed, or an :N-50 if the focus drive's clutch is disengaged (if applicable).

When all of the arguments are omitted, the A is transmitted after the focusing scan has completed.

The number in brackets is the difference between *focus value* when in-focus compared to when out-of-focus. It indicates the quality of focus obtained.

Caution: To protect the optical assembly and sample, ensure that the sample is at least 200 µm away from the optics and that the current position is zeroed, that is, the LCD display shows Z: 0.00000> 0.00000 before sending the AF command to the controller (where Z is the focus axis).

Command:AHOME (AH)

MS2000 or RM2000 syntax

Shortcut	AH
Format	AHOME [X=fast_axis] [Y=slow_axis]
Units	Millimeters
Remembered	Using SS Z
Required Firmware Module	ARRAY MODULE

Tiger syntax

Shortcut	AH
Format	[addr#]AHOME [X=fast_axis] [Y=slow_axis]
Units	Millimeters
Type	Card-Addressed
Remembered	Using [addr#]SS Z
Required Firmware Module	ARRAY MODULE

Set the location of the first array position when using the ARRAY MODULE. The X setting is for the fast axis which is by default the X axis of the stage, but can be changed using the SCAN command.

No Arguments: The command reads the current location and sets it to the first array position.

X: `[fast_axis]` Set or query the fast axis home position in millimeters.

Y: `[slow_axis]` Set or query the slow axis home position in millimeters.

Command:AIJ

Array Module

MS2000 or RM2000 syntax

Format	AIJ [X=i] [Y=j]
Units	Array Location
Required Firmware Module	ARRAY MODULE

Tiger syntax

Format	[addr#]AIJ [X=i] [Y=j]
Units	Array Location
Type	Card-Addressed
Required Firmware Module	ARRAY MODULE

Requires the ARRAY `MODULE` and an array specified with the ARRAY command.

No Arguments: `AIJ` returns the current array state.

X/Y: Move to the array location `(i, j)`, where `i` and `j` are the indices of the desired array location. The query `AIJ X? Y?` will return the `i` and `j` indices of the current array location. The AHOME location is position `(1, 1)`.

MS-2000 v9.54 or Tiger 3.53 required
Special Arguments: `AIJ X=0 Y=0` sets the indices to `(0, 0)` and doesn't move the stage. The next TTL pulse received will move the stage to position `(1, 1)`. Use TTL X=7 to enable TTL triggered array moves.

Note that if no move actually occurs if the `AIJ` command moves to the current position. For example, if you use `AHOME X Y` to set the current position to coordinate `(1, 1)` and then immediately issue `AIJ X=1 Y=1` then the motors will not move and no output TTL pulse (if configured) will occur. If the desire is to get a pulse out at the `(1, 1)` position, a workaround is to make a small relative move e.g. `R X=100 Y=100` between issuing the `AHOME` and `AIJ` commands.

The assignments of horizontal (“fast”) and vertical (“slow”) axes are done using the SCAN command. Most users will never need to change the defaults: the horizontal or X axis defaults to the card's first axis and the vertical or Y axis to the card's second axis.

Tiger MicroMirror Phototargeting

Format	[addr#]AIJ [X=horizontal_position] [Y=vertical_position]
Units	axis units
Type	Card-Addressed
Required Firmware Module	MM_TARGET

Moves to the specified location `(horizontal_position, vertical_position)` subsequently pulses the laser TTL signal. Positions are specified in axis units (the same as used by the WHERE or MOVE command). If the X and/or Y argument is omitted, the corresponding position from the last AIJ command will be used. Note that the position is changed as a side effect of this command. The WHERE or MOVE command will change the beam position without pulsing the laser TTL signal.

The TTL output used was the micromirror card itself (rarely wired to anything) until v3.35, but as of v3.36 the laser trigger backplane line is used instead so that the signal is more accessible.

The settling delay before turning on the laser and the laser pulse high time are specified using the WAIT and RTIME commands respectively.

Command:ARM

Shortcut	ARM
Format	ARM
Remembered	Using SS Z

Sending the ARM command without arguments starts the self-scanning of the ARRAY_MODULE sequence.

This has the same effect as the ARRAY command without arguments. It is recommended that you use the ARRAY command instead of the ARM command.

This command was previously related to the deprecated sequencer module.

Command:ARRAY (AR)

MS2000 or RM2000 syntax

Shortcut	AR
Format	ARRAY [X=N_fast] [Y=N_slow] [Z=Δ_fast] [F=Δ_slow] [T=θ]
Units	X and Y in integer, Z and F in mm, θ tilt degrees from X axis
Required Firmware Module	ARRAY
Remembered	Using SS Z

Tiger syntax

Shortcut	AR
Format	[addr#]ARRAY [X=N_fast] [Y=N_slow] [Z=Δ_fast] [F=Δ_slow] [T=θ]
Units	X and Y in integer, Z and F in mm, θ tilt degrees from X axis
Type	Card-Addressed
Required Firmware Module	ARRAY
Remembered	Using [addr#]SS Z

The ARRAY command specifies the grid size and interval for the array module. Briefly, this sets up a grid of points that can be traversed automatically with simple TTL control or with the RBMODE or AIJ commands.

The size of the array is N_fast by N_slow points, with points spaced apart distance Δ_fast and Δ_slow (expressed in millimeters). By default X is the fast axis (where most movements occur) and Y is the slow axis (with periodic movements), but this can be interchanged using the SCAN command (e.g. SN Y=1 Z=0 will make the fast axis the 2nd axis on the card, the Y axis usually, and the slow axis being the 1st axis usually X).

The location of the first point in the array is set with the AHOME command.

The array pattern can be rotated using the T parameter where the value is specified angle in degrees. When the value is non-zero then both X and Y motors will move between each grid point; e.g. if set to

45 degrees then the X and Y motors will move by the same amount.

Without arguments, the AR command starts self-scanning of the array. When the stage arrives on target, it will delay for a period of time set by the command RT Z=time_delay before continuing on to the next position. It is possible to repeat the array using the RM F byte.

Whether a raster or serpentine pattern is used is set using the SCAN F setting (default is serpentine).

If you start the array scan with the AR command (no arguments), it will use an internal timer that moves to the next position independently of TTL-input triggered moves. If you are driving the array scan with TTL X=7, then you should use the RM command (no arguments) to simulate a TTL input and start the array scan. This will avoid using the internal timer.

Command:AZERO (AZ)

MS2000 or RM2000 syntax

Shortcut	AZ
Format	AZERO [axis]...
Units	Integers 0-255

Tiger syntax

Shortcut	AZ
Format	AZERO [axis]...
Units	Integers 0-255
Type	Axis-Specific

Automatically adjusts the zero balance of the motor drive card. The expected “zeroed” values of AZ are typically around 127, though acceptable values may fall between 90 and 164. If an axis is not zeroed, the stage may have very different performance in one direction compared to the other, e.g. it may have trouble landing from one direction.

If AZ replies with NOT Zerod , run it again. If its unable to zero, then you may need to change AA setting.

Example

Queries the current AZ parameters.

```
AZ X? Y? Z?
:A X=83 Y=78 Z=59
```

Example

Runs the auto-zeroing algorithm on the X axis. Note: Multiple Axes can be set simultaneously (**AZ X Y Z**)

```
AZ X
:A Zero C:1
A C:1 H:100 L:0
B C:0 H:92 L:0
Bracket H:92 L:76
E C:0 H:92 L:76
E C:0 H:92 L:84
E C:1 H:92 L:88
E C:0 H:90 L:88
Zerod at:90
```

Command:BACKLASH (B)

Motorized Actuator

MS2000 or RM2000 syntax

Shortcut	B
Format	BACKLASH [axis] = [distance]...
Units	Millimeter
Remembered	Using SS Z

Tiger syntax

Shortcut	B
Format	BACKLASH [axis] = [distance]...
Units	Millimeter
Type	Axis-Specific
Remembered	Using [addr#]SS Z

This command sets (or displays) the amount of distance in millimeters of the anti-backlash move which absorbs the lash in the axis' gearing at the end of commanded moves[1)]. This behind-the-scenes move ensures that the controller approaches the final target from the same direction, which improves repeatability when using rotary encoders. A value of zero (0) disables the anti-backlash algorithm for that axis. The default value depends on motor build but is 0.04 for most common 4 TPI leadscrew pitch with rotary encoder, 0.01 for most common 16 TPI leadscrew pitch, and 0.02 for the x-axis of scan-optimized stages. For linear encoders a backlash move is not necessary and there is no reason to change the setting from the default value of zero (0). Moves with manual input devices (joystick or knobs) do not have any anti-backlash move.

Example:

```
B X=.05 Y=.05 Z=0
:A
B x?
:X=0.040000 A
```

The command in this example will make the controller move the X and Y axes to a location 50 microns away from the final target before moving to the final target, while the anti-backlash algorithm for the Z axis is disabled.

MicroMirror, Tiger Galvo (TGDAC4) and Rev B2 or older Tunable Lens Cards

Shortcut	B
Format	B [axis]=[0.1 to 15] …
Units	Frequency in kHZ
Type	Axis-Specific
Remembered	Using [addr#]SS Z

This command is “recycled” for a different use in MicroMirror axes than for motor axes. In the context of a MicroMirror axis this command is used to set the cut off frequency of the 5th order Bessel filter. Units are in KHz. The lowest acceptable value is 0.1 (100Hz) and highest is 15 (15kHz). For a typical micro-mirror to avoid mechanical resonance this should be set no higher than 0.8 kHz.

Example:

```
B R=0.1 S=0.1
:A
```

Sets 100Hz filter cut off freq for R and S axes

```
B P? Q?
:P=0.4 B=0.4 A
```

Queries the filter cut off freq for P and Q axes

Command:BCUSTOM (BCA)

MS2000 or RM2000 syntax

Shortcut	BCA
Format	BCA [X = @ Normal Press] [Y = @ Long Press] [Z = @ Extra Long Press] [F = Home Long Press] [T = Home Extra Long Press] [R = JS Normal Press] [M = JS Long Press]
Units	Integer code (see table below)
Firmware Version Required	9.2g+

Remembered	Automatically on power down. Not affected by SS Z or SS X. Before version 9.2m, SS Z used to save settings.

Tiger syntax

Shortcut	BCA
Format	[addr#]BCA [X = @ Normal Press] [Y = @ Long Press] [Z = @ Extra Long Press] [F = Home Long Press] [T = Home Extra Long Press] [R = JS Normal Press] [M = JS Long Press]
Units	Integer code (see table below)
Type	Card-Addressed
Firmware Version Required	3.0+
Remembered	Automatically on powerdown. Not affected by [addr]SS Z or [addr]SS X. Before version 3.3, [addr]SS Z used to save settings.

In `Tiger` version 3.0+ and `MS2000` version 9.2g+ the Button Function assignment has been rewritten to be more flexible. Every possible button function is now assigned a number. This function can be assigned to any button (@, Home, and Joystick Button) and any press duration (Normal, Long and Extra Long Press) through the BCA commands X, Y, Z, F, T, R, and M arguments.

The settings of `BCUSTOM` are automatically saved in non-volatile memory when changed, they will be available even on controller restart.

As of `Tiger` version 3.18 and `MS2000` version 9.2l a button function can be initiated over serial using the `BE F` command (BENABLE). The function doesn't need to be assigned to a particular button for this to work. Note: this function does not interact with the `button_flag_byte`, use EXTRA M=# if you need that functionality.

Note: The behavior of this command is very different pre-Tiger version 3.0 and MS2000 version 9.2g

As of `MS000` version 9.2m+ and `Tiger` v3.35+, it's possible to assign button functions to Home `Normal Press` and `Joystick Extra Long Press` using the BENABLE command. The parameters **R** and **T** are used, and follow the same behavior as BCUSTOM. The parameter **M** to sets the `Zero/Halt Normal Press` button function with `BENABLE M=#`.

Note: The `Zero/Halt` button will always halt all axes on a button press unless you set the button function to `0 - No Function Performed`, which disables the halting routine. The halting routine happens as soon as you press the button, not in the release handler.

Example: `#BENABLE R=0` to disable the home button normal press, where # is the Tiger card address.

Button Press Duration:

```
The amount of time that a button is held down determines the type of button
press.
```

```
* 0 to 1 seconds: Normal Press
* 1 to 3 seconds: Long Press
* 3 or more secs: Extra Long Press
```

Button Function Table

The table below lists and describes all possible button functions

No	Function
0	No function performed
1	Unused Button Function
2	Toggles Knob between two axis, like Z and F
3	CRISP and TRACKING related, short press functions. Steps from IDLE to Calibration states to lock and unlock state.
4	CLOCKED DEVICE related, moves clocked devices like Turret and slider to next position.Note, if there are multiple clocked devices on the same card or controller, all of them are moved. For more specificity see 36 and 37 below
5	ARRAY MODULE related,same as Command:ARRAY (AR). When TTL X=7 does move to next array position.
6	RING BUFFER related, move to next ring buffer position; On TGLED card, button press mimics TTL pulse verion 3.24+.
7	SCAN MODULE related, halts scan move
8	AUTOFOCUS related, performs autofocus routine.
9	Unused Button Function
10	AT_XYZ_KNOB related, changes XYZ knob state. Cycles knob control between X, Y, and Z axes.
11	AT_XYZF_KNOB related, changes XYZF knob state. Cycles knob control between X, Y, Z, and F axes.
12	ZLOADER related, Moves Z away from the sample, to its upper limit, and back. For loading samples. Only available on MS2000.
13	CRISP and TRACKING related, performs CRISP very long press functions
14	ADEPT related, toggles between piezo external and internal input mode
15	CRISP and TRACKING related, performs CRISP long press functions. Stops current CRISP operation like stop dither, unlock etc.
16	ARRAY MODULE related, puts ARRAY Module in start state
17	Unused Button Function
18	RING BUFFER related, loads current stage positions of all axes into ring buffer
19	AT RAMM LOAD related, moves Y and F axis to their upper and lower limits.
20	SCAN MODULE related, puts SCAN MODULE is start state
21	AUTOFOCUS related, performs autofocus calibration
22	ZOOM related, sets up zoom profile
23	PLANAR CORRECTION related, sets planar correction points
24	RING BUFFER related, clears ring buffer
25	TOGGLE ALL AXES related, swaps knob control between two axes.
26	TRACKING related, short press function
27	Unused Button Function
28	JS_FASTSLOW related, toggles joystick speed between fast and slow
29	PLANAR CORRECTION related, resets planar correction

No	Function
30	CLOCKED DEVICE related, moves clocked devices like Turret and slider to previous position. Note, if there are multiple clocked devices on the same card or controller, all of them are moved. For more specificity see 38 and 39 below
31	JS_FASTSLOW related, sets joystick speed to fast
32	JS_FASTSLOW related, sets joystick speed to slow
33	LED related, increase LED intensity
34	LED related, decrease LED intensity
35	LED related, toggle LED ON and OFF
36	CLOCKED DEVICE related, moves the FIRST clocked devices like Turret and slider to next position. Similar to option 4
37	CLOCKED DEVICE related, moves the SECOND clocked devices like Turret and slider to next position. Similar to option 4
38	CLOCKED DEVICE related, moves the FIRST clocked devices like Turret and slider to previous position. Similar to option 30
39	CLOCKED DEVICE related, moves the SECOND clocked devices like Turret and slider to previous position. Similar to option 30
40	HOME related, issues a Command:HOME on all axis motors MS2000 9.2n and Tiger v3.36 firmware
41	ZERO related, issues a Command:ZERO on all axes. MS2000 9.2n and Tiger v3.36 firmware
42	Repeats the last issued relative move Command:MOVREL MS2000 9.2o firmware

Deprecated Button Functions

1	~~Smart Move related~~ This function no longer exists, removed in Tiger 2.5 and MS2000 9.2p
9	~~CRIFF related, toggle CRIFF lock~~ This function no longer exists, CRIFF was replaced by CRISP.
17	~~CRIFF related, change CRIFF state.~~ This function no longer exists, CRIFF was replaced by CRISP.

Example:

Take a firmware build like `STD_XY`. This firmware is packed with modules such as:

- `RING BUFFER` module
- `JS_FASTSLOW`, joystick button press toggles joystick speed between fast slow.

In a build like this there are a lot of modules fighting for control of the buttons. There is a priority list that sets up the defaults button function. Lets Query the controller on what the default assignments ended up being.

Tiger Example

```
1BCA X? Y? Z? F? T? R? M?
X=0 Y=0 Z=0 F=0 T=0 R=28 M=18
X: @ Normal
Y: @ Long
Z: @ Ext Long
F: Home Long
```

```
T: Home Ext Long
R: Js btn Normal
M: Js btn Long
<LF>
```

MS2000 Example

```
BCA X? Y? Z? F? T? R? M?
X=0 Y=0 Z=0 F=0 T=0 R=28 M=18
X: @ Normal
Y: @ Long
Z: @ Ext Long
F: Home Long
T: Home Ext Long
R: Js btn Normal
M: Js btn Long
<LF>
```

So @ normal press, does nothing @ long press, does nothing @ extra long press, does nothing Home long press, does nothing Home extra long press, does nothing Joystick button normal press, toggles joystick speed Joystick button long press, loads current position into ring buffer.

If user wants the Ring Buffer to be more prominent, then following command can be issued.

Tiger Example

```
1BCA X=6 F=24 R=18 M=28
:A
<LF>
```

MS2000 Example

```
BCA X=6 F=24 R=18 M=28
:A
<LF>
```

Now, @ normal press, moves to next ring buffer position Home long press, clear the ring buffer Joystick button normal press, loads current stage position into ring buffer Joystick button long press, and toggles joystick speed.

Tiger example scenario

```
30: Comm v3.26 TIGER_COMM Apr 09 2019:15:52:41
31: X:XYMotor,Y:XYMotor v3.25 STD_XY_LED Mar 18 2019:15:56:27
32: Z:ZMotor,S:Slider v3.26 STDZ_SLDR8 Apr 30 2019:08:40:35
33: O:Tur v3.26 TURRET_SINGLE Apr 30 2019:08:41:10
```

A user with a Tiger system in the above configuration has two clocked position devices. A filter slider on card #2 and turret on card#3. They would like to move these devices with button presses. Lets set it up so that on short '@' button press (less than 1-sec press) Filter slider moves, then on long'@' button press (1 to 3-sec press) the turret moves. The button function that does this is '# 4' (see the table above). '@' short press assigned with 'X' variable, and '@' long press is assigned with 'Y' variable.

2BCA X=4 Y=0 , this tells card#2 which drives the filter slider to respond to short @ press with slider move, and ignore any long @ button presses.

3BCA X=0 Y=4 , this tells card#3 which drives the turret to respond to long @press with turret move and ignore any short @ button presses.

1BCA X=0 Y=0 , this tells card#1 which drives XY stage to ignore any short or long @ button presses.

Try it out. If you like the behavior, commit it to systems onboard memory with serial commands

```
1SS  Z
2SS  Z
3SS  Z
```

More info on SS Z command is here, http://www.asiimaging.com/docs/commands/saveset

Command:BENABLE (BE)

MS2000 or RM2000 syntax

Shortcut	BE
Format	BENABLE [X=Toggle] [Z=Enable_Byte] [F=Button_Function] [R=Home Normal Press] [T=JS Extra Long Press] [M=Zero/Halt Normal Press]
Units	None
Remembered	Using SS Z

Tiger syntax

Shortcut	BE
Format	[Addr#]BENABLE [X=Toggle] [Y?] [Z=Enable_Byte] [F=Button_Function] [R=Home Normal Press] [T=JS Extra Long Press] [M=Zero/Halt Normal Press]
Units	None
Type	Card-Addressed
Remembered	Using [addr#]SS Z

Enables or disables button functions for the specified card and specified buttons, either all/none (X, or `Toggle`) or with finer granularity (Z, or `Enable_Byte`). Specific buttons can be enabled/disabled by explicitly setting the `Enable_Byte`.

X parameter `Toggle` enables or disables the controller buttons. `BE  X=0` disables all buttons and pulses; i.e. `BE  X=0` is equivalent to `BE  Z=0`. `BE  X=1` enables all buttons and pulses (default setting);

i.e. BE X=1 is equivalent to BE Z=15. Querying X returns the same value as querying Z.

Tiger v3.15 required.
Y parameter has special functionality for the Tiger Comm Card, see the drop down at the bottom of the page.

Z parameter `Enable_Byte` is bit-mapped number that determines which buttons are enabled or disabled. The bits are set to `1` when enabled or `0` when disabled, and are defined in the table below. Querying Z returns the same value as querying X.

Note: Bit 5 is a special case; it changes the behavior of the physical button to zero the Z axis only and has been removed from Tiger code after v3.20.

From firmware version 9.55 and later, the command BENABLE can be disabled using `CCA Z=28` such that external BE commands cannot disable buttons. The default is to allow the buttons to be disabled by BE, which can also be reset with `CCA Z=29`. See CUSTOMA for more information.

BENABLE Z - Enable Byte	
Bit	**Button**
0	“Zero” Button
1	“Home” Button
2	“@” Button
3	Joystick Button
4	Reserved
5	Zero Z Only Removed from Tiger after v3.20
6	Reserved
7	Reserved

MS-2000 v9.2m or Tiger v3.19 required
F parameter `Button_Function` is a positive integer code for the button function that will be executed. See documentation of BCUSTOM for a list of available button functions. This allows a button press to be simulated using a serial command. However, this will not modify the `button_flag_byte`.

If you need to call button functions that interact with the `button_flag_byte` use EXTRA M=# instead.

Button Function Assignment Parameters

MS-2000 v9.2m or Tiger v3.19 required
You can assign functions from from the button function table in BCUSTOM to additional `Zero/Halt`, Home, and `Joystick` button press durations not available on BCUSTOM.

M - assign a button function to `Zero/Halt Normal Press`.

R - assign a button function to `Home Normal Press`.

T - assign a button function to `Joystick Extra Long Press` .

Note: The `Zero/Halt` button will always halt all axes on a button press unless you set the button function to `0 - No Function Performed`, which disables the halting routine. The halting routine happens as soon as you press the button, not in the release handler.

Tiger Example

To make Axis on Card #1 ignore the zero and home button, and only respond to Joystick and @ buttons. Bit 3 and Bit 2 set to '1' , Bit 1 and Bit 0 set to '0'. Binary '1100' is Decimal '12'

```
1BE Z=12
:A
```

MS2000 Example

To make all the axis on controller ignore the zero and home button, and only respond to Joystick and @ buttons. Bit 3 and Bit 2 set to '1' , Bit 1 and Bit 0 set to '0'. Binary '1100' is Decimal '12'

```
BE Z=12
:A
```

Y Parameter - Additional Feature in Tiger Version 3.15

Addressing the COMM card specifically (or omitting the address on the command) results in a different behavior. Disabling a button on the COMM card will result in disabling that functionality for all cards in the rack. This disabling happens at the COMM card so the other cards in the rack never receive notification of a change in the button's state. In this way, individual cards may be set to the desired functionality and a layer of control over all cards may be applied without affecting the settings on individual cards.

The `0BE Y?` query command provides a report of past button states. Every time one of the inputs is activated, the COMM card notes the activation by setting a bit in a status byte. That bit will remain set until the status byte is queried again on the COMM card with `0BE Y?`. The result of the query will return the current status byte to the host, then clear the status byte (set all bits representing input sources to 0), thereby preparing the status byte for further button press detection. The format of the bits in the returned status byte is the same as the table above. A one 1 on the specified bit represents the input has been activated since the last query.

Starting with v3.21, a button that is held down during a serial query of button state will be reported as activated every query up through the one immediately following release. This can be used by high-level software to time button presses, e.g. if querying happens every second and the button is held down for 1.001 seconds then it will be reported as being held down twice. If the button is held down for 0.1 seconds then most of the time it will only be reported once, unless the query happens to occur during that 0.1 seconds in which case it will be reported twice.

Command:BUILD (BU)

MS2000 syntax

Shortcut	BU
Format	BUILD [X] [Y] [Z]
Units	None

Tiger syntax

Shortcut	BU
Format	[Addr#]BUILD [X] [Y]
Units	None
Type	Card-Addressed (defaults to COMM)

Build Information

BU: (No Arguments) This command returns the firmware build name. An example of a build name is STD_XYZ.

BU X: This command returns various build configuration options, the firmware modules in the build, and the build name.

User String

The BU Y command is used to store a user defined string which can be saved using the SAVESET Z command. The maximum length of the user string is 20 characters. Remember to use the card address if you are storing a string on Tiger.

BU Y=#: writes a character to the user string at the write position. The write position starts at 0 on system power up and increase by 1 every time BU Y=# is sent to the controller. You specify the characters in their decimal ASCII form, for example lower-case 'a' is 97, so you would send BU Y=97. The valid range of ASCII values is 32-126 inclusive.

BU Y-: clears the user string and resets the write position to 0.

BU Y?: reads the user string.

BU Y is available on MS2000 v9.2m+ and Tiger v3.39+ firmware, you will also need Tiger Comm v3.39+ firmware.

To make things easier on the user, here is script that takes a Python string and enters the serial commands for you:

Python User String

```
# /// script
# dependencies = ["pyserial>=3.5"]
# ///
import serial

def main() -> None:
    # the input string to send to the controller
    user_string = "abcdefghij1234567890"
    save_settings = True
    # use an empty string for MS2000 (card_address = "")
```

```
    card_address = "2"

    # error checking
    if len(user_string) > 20:
        raise Exception("Max stored string length is 20.")

    # open the serial port and send characters to the controller
    with serial.Serial("COM4", 115200, timeout=1) as serial_port:
        # clear the current stored string
        serial_port.write(bytes(f"{card_address}BU Y-\r",
encoding="ascii"))
        serial_port.readline()

        # send the input string to the controller
        for character in user_string:
            serial_port.write(bytes(f"{card_address}BU
Y={ord(character)}\r", encoding="ascii"))
            serial_port.readline()

        # print the stored string and check to see if it's the same as
the input string
        serial_port.write(bytes(f"{card_address}BU Y?\r",
encoding="ascii"))
        response = serial_port.readline().decode().rstrip("\r\n")
        if response == user_string:
            print(f"Successfully stored the input string =>
{response}")
            if save_settings:
                serial_port.write(bytes(f"{card_address}SAVESET Z\r",
encoding="ascii"))
                serial_port.readline()
                print("Settings saved to the controller using SAVESET
Z.")
        else:
            print(f"Error: expected {user_string} but got {response}
instead!")
if __name__ == "__main__":
    main()
```

Volatile Value

BU Z is used to edit and access an internal integer that is specifically volatile, i.e. the integer is always set to 0 when the controller is powered on or reset. The value ranges between 0 and 65535.

BU Z=<number> sets the value.

BU Z+ and **BU Z-** increment and decrement the value respectively, with wrap-around.

BU Z? queries the value.

Available in MS-2000 as of firmware v9.53.

Example:

```
bu z?
:A 0
BU Z-
:A
BU Z?
:A 65535
BU Z+
:A
BU Z+
:A
BU Z?
:A 1
BU Z=123
:A
BU Z+
:A
BU Z?
:A 124
```

Example Output

This is the response from a Tiger controller, the MS2000 response has less information but the meaning is the same between the two controllers. The MS2000 response does not include `Axis Addr`, `Hex Addr`, or `Axis Props`. Tiger also has an additional `POSITIONS SAVED` or `POSITIONS NOT SAVED` right before the firmware modules. The meaning of each line of the `BU X` command response is as follows:

STD_XY The build name of the firmware.
Motor Axes: X Y The name of each axis.
Axis Types: x x z The type of each axis (see table below).
Axis Addr: 2 2 The card address of each axis. **[*Tiger*]**
Hex Addr: 32 32 The hex address of each axis. **[*Tiger*]**
Axis Props: 10 10 The axis properties for each axis (see table below). **[*Tiger*]**
CMDS: XY The argument names for pseudo-axis commands.
BootLdr V:0 The version of the bootloader.
Hdwr REV.F The hardware revision of the PCB.
POSITIONS NOT SAVED Were the positions saved on power off? **[*Tiger*]**
RING BUFFER 50 The following entries are firmware modules.
SEARCH INDEX
ARRAY MODULE
IN0_INT
SRVLK_TTL
ZF_KNOB
CLUTCH XYKNOB FASTSLOW
SHUTDOWN_TASK

MOVETASK

Tiger Example Response

```
1BU
STD_XY
```

```
1BU X
STD_XY
Motor Axes: X Y
Axis Types: x x
Axis Addr: 2 2
Hex Addr: 32 32
Axis Props:  10  10
CMDS: XY
BootLdr V:0
Hdwr REV.F
POSITIONS NOT SAVED
RING BUFFER  50
SEARCH INDEX
ARRAY MODULE
IN0_INT
SRVLK_TTL
ZF_KNOB
CLUTCH XYKNOB FASTSLOW
SHUTDOWN_TASK
MOVETASK
```

With an address of 1 given, the specified card #1 replies. This reply just contains axis name and types present on the card. However it goes into more detail, printing all the firmware modules present on the card.

The values listed for axis properties are decimal integer representations of a binary code which represents any special properties of the axis. Usually these could also be identified by doing a BU X query of each card and interpreting the response, but they are listed separately on the axis property line for convenience.

MS2000 Example Response

```
BU
STD_XYZ
```

```
BU X
STD_XYZ
Motor Axes: X Y Z
Axis Types: x x z
CMDS: XYZFRTM
BootLdr V:1
Hdwr REV.E
LL COMMANDS
```

```
RING BUFFER 50
SEARCH INDEX
IN0_INT
DAC OUT
FS_LED
SHUTDOWN_TASK
```

No card address needed on MS2000.

Tiger Comm Card Response

Adding the card address is optional. If no address is given, then Tiger Comm replies. If an address is present, then the specified card replies.

```
BU
TIGER_COMM
```

```
BU X
TIGER_COMM
Motor Axes: X Y A B C C 0 1
Axis Types: x x u u u u w w
Axis Addr: 1 1 2 2 2 2 3 3
Hex Addr: 31 31 32 32 32 32 33 33
Axis Props:   0   0   0   0   0   0   0   0
```

As no address was given, Tiger Comm replies. It replies with its build name, all axis names present in the system (axes will always be A-Z, filterwheels 0-9). For each axis the type is given (see table in section Identifying Controller Configuration) and the card address in both character and hex formats. Finally, an integer is given to indicate the presence of special properties or capabilities of the axis, such as CRISP auto-focus or RING BUFFER module for TTL positioning; these can be interpreted using the axis properties table below. This command is useful to quickly identify all the axes names and types present in the system.

Tables

Axis Properties

Bit 0:	CRISP autofocus firmware
Bit 1:	RING BUFFER firmware
Bit 2:	SCAN firmware
Bit 3:	ARRAY firmware or MM_TARGET firmware
Bit 4:	SPIM firmware v2.82
Bit 5:	SINGLEAXIS and/or MULTIAXIS firmware v2.82
Bit 6:	LED illumination v2.88

Bit 7:	Reserved

Axis Type List

Axis Type Short	Axis Type Long	Description
x	XYMotor	XY stage
z	ZMotor	Z focus motor drive. LS50s, Z scopes etc
p	Piezo	Piezo Focus. ASIs ADEPT, Piezo DAC etc
o	Tur	Objective Turret
f	Slider	Filter Changer
t	Theta	Theta Stage
l	Motor	Generic linear motorized stage, TIRF, SISKIYOU etc
a	PiezoL	Generic linear piezo stage
m	Zoom	Zoom magnification motor axis
u	MMirror	Micro Mirror, Scanner 75 etc
w	FW Filter	Wheel
s	Shutter	Shutter
g	Logic	Programmable logic card
i	LED card	Multi LED Driver card
b	Lens	Tunable Lens
d	DAC	Digital to Analog converter(DAC)
u	Unknown	Unknown axis type

Command:CDATE (CD)

MS2000 or RM2000 syntax

Shortcut	CD
Format	CDATE
Type	Card-Addressed

Tiger syntax

Shortcut	CD
Format	[Addr#]CDATE
Type	Card-Addressed

This command returns the date and time that the current firmware was compiled.

MS2000 Example

```
CD
Dec 19 2008:16:19:59
```

Tiger Example

```
1CD
```

```
Dec 19 2008:16:19:59
```

This example shows that the firmware running was compiled on December 19th year 2008 at 4:19:59 PM.

Command:CNTS (C)

MS2000 or RM2000 syntax

Shortcut	C
Format	CNTS [axis] = [encoder counts per mm]...
Units	Encoder counts per mm
Remembered	Using SS Z

Tiger syntax

Shortcut	C
Format	CNTS [axis] = [encoder counts per mm]...
Units	Encoder counts per mm
Type	Axis-Specific
Remembered	Using [addr#]SS Z

Changes axis' encoder counts per mm. For example, doubling this number would cause a given number of mm to be converted internally to twice as many encoder counts as before. A command to move the stage 2 mm would instead cause it to move 4 mm. **MOST USERS DO NOT NEED THIS FUNCTION!** If your stage is not moving as expected try making sure the leadscrew pitch is set appropriately with the `CUSTOMA` command.

\begin{equation} Cnts = {(6.5536 * 107) \over d} \end{equation}

where d is the total range of movement in microns. For example, if the range of movement is -100um to +100um, then `d = 200`, and `Cnts = 327680`.

Note: For a piezo device, always set **CNTS** first, then limits (**SL** and **SU**) afterward.

Example:

```
C X=13490.4
:A
C X?
:X=13490.4 A
```

Changes the encoder constant on the X-axis to 13490.4 counts/mm. The default values for this parameter are restored upon reset and should not require user modification.

Command:CUSTOMA (CCA)

MS2000 Syntax

Shortcut	CCA
Format	CCA X=n Y=m Z=o
Remembered	X automatically saved (see note), Y and Z require SS Z

Tiger Syntax

Shortcut	CCA
Format	[Addr#]CCA X=n Y=m Z=o
Type	Card-Addressed
Remembered	X automatically saved (see note), Y and Z require [Addr#]SS Z

Note: For the Tiger programmable logic card this command is used differently, see the Tiger Programmable Logic Card (TGPLC) documentation and ignore this page.

X parameter

X sets the configuration flags according to the table below for builds with STNDRD_XY and/or STNDRD_Z axis profiles. Configuration flags are changed one at a time for each execution of the CCA command. The changes will not take effect until the controller is power cycled or reset via the RESET command.

Important: The controller should be reset immediately after setting any desired **CCA X** flags, either toggle the physical power switch or send the **RESET** command.

Note: The X parameter is saved automatically, you do not need to send the **SS Z** command.

Warning! Executing a **SS Z** command before resetting can cause the firmware to get confused. *See notes below.*

Set CCA X=# and reset the controller before changing any settings that require SS Z to be saved.

1. Set CCA X=# flags
2. Reset the controller
3. Change other settings
4. Save settings with SS Z

CCA X=	Description	Display	MS-2000 Specific Comments	TG-1000 Specific Comments
1	XY Linear Encoders Used	L	Use DIP SW 3 (See Note 1)	
2	XY Rotary Encoders Used	R	Use DIP SW 3 (See Note 1)	
3	Z Linear Encoders Used	L	Use DIP SW 6 (See Note 1)	
4	Z Rotary Encoders Used	R	Use DIP SW 6 (See Note 1)	
5	XY Leadscrew Coarse Pitch (6.35 mm - Standard)	B	Firmware Default	
6	XY Leadscrew Fine Pitch (1.59 mm)	A		
41	XY Leadscrew Medium (3.18 mm)	M		
7	XY Leadscrew Super Coarse (12.7 mm)	C		
18	XY Leadscrew Ultra Coarse (25.4 mm)	D		
8	XY Leadscrew Ultra Fine (0.635 mm)	U	0.635 Leadscrew post 9.0e , 0.317mm pre 9.0e	
38	XY Leadscrew Ultra-ultra Fine (0.318mm)	u		
15	XY GTS Motor/Fine Pitch (1.59 mm)	a		
20	XY GTS Motor/Medium Pitch (3.18 mm)	8		
16	XY GTS Motor/Coarse Pitch (6.35 mm)	b		
17	XY GTS Motor/Super Coarse (12.7 mm)	c		
63	XY Heavy Lift Stage Medium Pitch (3.18 mm)	L		
28	XY SISKIYOU Motor/Leadscrew	S		
39	XY MA-12B Linear Actuators	T		
42	XY Maxon Direct-Drive (1.59 mm)	x		Not Implemented
43	XY Maxon Direct-Drive (3.18 mm)	e		Not Implemented
44	XY Maxon Direct-Drive (6.35 mm)	X		Not Implemented
48	XY LS25 Fine Pitch (1.59 mm)	G	Version 9.2l+	
56	XY LS25 Coarse Pitch (6.35 mm)	H	Version 9.2m+	
59	XY LS25 Extra-fine Pitch (0.635 mm)	g	Version 9.2n+	
58	XY Leadscrew Ultra Coarse (25.4 mm) with 76:1 Gear motor	E	Version 9.2l+	
21	XY Linear Encoder 10 nm resolution	1	Firmware default	
22	XY Linear Encoder 20 nm resolution	2		
50	XY Linear Encoder 50 nm resolution	5		
51	XY Linear Encoder 5nm resolution	K	Version 9.0e+	
52	XY Linear Encoder 2.5nm resolution	L	Version 9.0e+	
30	XY Limit Polarity - Normally Open	o	Firmware default	
31	XY Limit Polarity - Normally Closed	c		
9	Z Scope Drive 100 um/rev.	1	Firmware default	
10	Z Scope Drive 200 um/rev.	2		

CCA X=	Description	Display	MS-2000 Specific Comments	TG-1000 Specific Comments
19	Z Scope Drive 400 um/rev.	4		
60	Z Scope Drive 500 counts/rev Rotary Encoder	D	Firmware Default	
61	Z Scope Drive 1000 counts/rev Rotary Encoder	M		
62	Z Scope Drive 2048 counts/rev Rotary Encoder	2		
11	Z Leadscrew Coarse Pitch	B		
12	Z Leadscrew Fine Pitch	A		
13	Z Leadscrew Super Coarse Pitch	C		
14	Z Leadscrew Ultra Fine Pitch	U		
47	Z Leadscrew Ultra Coarse	D		
45	Z GTS Motor/Fine Pitch (1.59 mm)	a		
46	Z GTS Motor/Coarse Pitch (6.35 mm)	b		
68	Z Heavy Lift Stage Medium Pitch (6.35 mm)	L		
29	Z SISKIYOU Motor/Leadscrew	S		
49	Z LS25 Fine Pitch (1.59 mm)	G	Version 9.2l+	
57	Z LS25 Coarse Pitch (6.35 mm)	H	Version 9.2m+	
64	Z LS25 Ultra Fine Pitch (0.635 mm)	g	Version 9.2o+	
26	ZF Linear Encoder 10 nm resolution	1	Leadscrew devices only. LE resolution is 50nm on scope drives.	
27	ZF Linear Encoder 20 nm resolution	2		
53	ZF Linear Encoder 5nm resolution	K	Version 9.0h+	
54	ZF Linear Encoder 2.5nm resolution	L	Version 9.0h+	
55	ZF Linear Encoder 50nm resolution	5	Version 9.2f+	
32	ZF Limit Polarity - Normally Open	o	Firmware default	
33	ZF Limit Polarity - Normally Closed	c		
34	Piezo Range 50 um	f or Pf		
65	Piezo Range 70 um	g or Pg	Not Implemented	
23	Piezo Range 100 um	1 or P1		
35	Piezo Range 150 um	S or PS	Firmware default	
24	Piezo Range 200 um	2 or P2		
36	Piezo Range 300 um	3 or P3		
25	Piezo Range 350 um	t or P4		
67	Piezo Range 400 um	6		
37	Piezo Range 500 um	5 or P5		
66	Piezo Range 1000 um	W	Experimental	Not Implemented
(20)	(Reserved for LX-4000 LE Flag)		Does not apply to MS2000 or Tiger.	
(26)	(Reserved for Tracer Enable)		Does not apply to MS2000 or Tiger.	
70	The joystick and knob are always enabled, and the device assignments cannot be changed. The JOYSTICK command has no effect.	J	Version 9.0f and later.	Not Implemented
71	The joystick and knob can be disabled, and the device assignments can be changed. The JOYSTICK command works normally.	j	Firmware default. Version 9.0f and later.	Not Implemented
	Fixed Profile	F	Place holder profile	

CCA X=	Description	Display	MS-2000 Specific Comments	TG-1000 Specific Comments
	MicroMirror 6 degrees	U6		TG-1000 only
	MicroMirror 8 degrees	U8		TG-1000 only
	MicroMirror 10 degrees	UA		TG-1000 only

Note 1: Applies to LX-4000 systems only. On MS-2000 and MS-4000 systems, use DIP Switch #3 for XY linear encoders and DIP Switch #6 for Z-axis linear encoders instead of this CCA setting.

Example

```
CCA X=6
:A
```

Sets to XY stage for 1.59mm pitch lead screws.

CCA X? Returns string representing current state of flags
A: XY:RA Z:RN Shows XY stage is rotary encoded, lead screw pitch A (1.59mm), and Z-drive is rotary encoded, 100µm/turn scope motor drive.
A: XY:RAj Z:RN Shows XY stage is rotary encoded, lead screw pitch A (1.59mm), JOYSTICK command works normally for all axes, and Z-drive is rotary encoded, 100µm/turn scope motor drive. Version 8.8i and all later 8.8x; version 9.0f and later.
XY:F or Z:F indicate that the XY or Z settings are Fixed by the firmware build and cannot be changed using the CCA command.

A listing of the valid CCA X configuration flags is displayed for firmware builds where sufficient space is available.

```
 A: XY:RBJ Z:RN PF:2

5  XY B PITCH 4/in
6  XY A PITCH 16/in
7  XY C PITCH 2/in
8  XY 0 PITCH 80/in
18 XY D PITCH 1/in
21 XY 1 XYLE 10nm
22 XY 2 XYLE 20nm

9  Z N SCOPE 100u/T
10 Z Z SCOPE 200u/T
11 Z B PITCH 4/in
12 Z A PITCH 16/in
13 Z C PITCH 2/in
14 Z U PITCH 80/in
19 Z H SCOPE 100u/T 25nm

23 P 1 100um RANGE
24 P 2 200um RANGE
```

Y parameter

Y sets number of move repetitions. Default value is zero. That is, a MOVE command causes the system to initiate one move to the given position. If m > 0, then the move will be initiated more than once as a means to achieve fine adjustment and a more stable landing. This parameter is saved in non-volatile memory by the SS Z command. Requires MOVETASK firmware module which is standard for XY builds but not most others.

Example

```
CCA Y=3
:A
```

All moves will be initiated four times.

Z parameter

Z sets system configuration flags according to following table. Parameter changes must be saved in non-volatile memory by the ''SS Z'' command.

CCA Z=	Description	Display	MS2K Comment	TG-1000
1	X axis movement direction is positive (default).	+	Firmware Default	
2	X axis movement direction is negative.	-		
3	Y axis movement is positive (default) (Note: In the MS-4000, the default direction value for the Y axis is -1)	+	Firmware Default	
4	Y axis movement is negative.	-		
5	Z axis movement is positive	+	Firmware Default	
6	Z axis movement is negative.	-		
7	F axis movement is positive.	+		
8	F axis movement is negative.	-		
9	Disengage clutch	D		
10	Engage clutch	E		
11	Enable LCD display	O		Not Implemented
12	Disable LCD display	F		Not Implemented
13	CLOCKED DEVICES on 1st axis take shortest path	S		Applied to both axes until 3.10
14	CLOCKED DEVICES on 1st axis do not take shortest path	L		Applied to both axes until 3.10
15	Disable ADEPT piezo self test on startup	N	MS-2000 9.2d required.	
16	Enable ADEPT piezo self test on startup	C	Firmware Default, MS-2000 v9.2d required.	Firmware Default

CCA Z=	Description	Display	MS2K Comment	TG-1000
17	CLOCKED DEVICES on 2nd axis take shortest path	S	Works in 9.2m and above	
18	CLOCKED DEVICES on 2nd axis do not take shortest path	L	Works in 9.2m and above	
20	The joystick and knob are always enabled, and the device assignments cannot be changed. The JOYSTICK command has no effect..	j	MS-2000 v9.0f required.	Not Implemented
21	The joystick and knob can be disabled, and the device assignments can be changed. The JOYSTICK command works normally.	J	Firmware Default, MS-2000 v9.0f required.	Implemented by default
22	Reverses joystick polarity of the card's first axis	r	TG-1000 only, v3.05 required. Re-issue J command or restart after SS Z to take effect.	
23	Joystick polarity of card's first axis set to default	l	TG-1000 only, Firmware Default v3.05 required. Re-issue J command or restart after SS Z to take effect.	
24	Reverses joystick polarity of the card's second axis	r	TG-1000 only, v3.05 required. Re-issue J command or restart after SS Z to take effect.	
25	Joystick polarity of card's second axis set to default	l	TG-1000 only, Firmware Default, v3.05 required. Re-issue J command or restart after SS Z to take effect.	
26	Enable Encoder E flag check Expressed as error 110+ in dump buffer		MS-2000 only, v9.2j required.	
27	Disable Encoder E flag check		MS-2000 only, Firmware Default, v9.2j required.	
28	Buttons are always enabled and cannot be disabled. The button functions cannot be changed. The BENABLE and BCUSTOM commands have no effect.	b	MS-2000 v9.55 required.	
29	Buttons can be disabled and button functions can be changed. The BENABLE and BCUSTOM commands work normally.	B	Firmware Default MS-2000 v9.55 required.	

Note: A few products have different axis names. When in doubt, call ASI.

Command:CUSTOMB (CCB)

Not implemented in Tiger except for programmable logic card, for that see Tiger Programmable Logic Card (TGPLC) documentation and ignore this page.

Shortcut	CCB
Format	CCB X=# Y=# Z=[1 to 10] F=# T=#
Units	None

Remembered	Using SS Z
Firmware Required	PLANAR CORRECTION

Planar correction requires the `PLANAR CORRECTION` firmware module.

X: Returns the X coordinate of the current index with `CCB X?`. Sets the X coordinate with `CCB X=#`. If `CCB T=1`, the points are x1, y1, z1… for `CCB T=2` the points are x2, y2, z2, etc.

Y: Returns the Y coordinate of the current index with `CCB Y?`. Sets the Y coordinate with `CCB Y=#`.

F: Returns the Z coordinate of the current index with `CCB F?`. Sets the Z coordinate with `CCB F=#`.

T: Returns the current index with `CCB T?` Sets the current index that the the X, Y, and F axes operate on with `CCB T=#`. The value of T can be 1, 2, or 3.

Z: planar correction control

CCB Z=1 - Set the current position to point x1, y1, z1.
CCB Z=2 - Set the current position to point x2, y2, z2.
CCB Z=3 - Set the current position to point x3, y3, z3.

Set the current xyz position to the values `x1, y1, z1 … x3, y3, z3` respectively.

CCB Z=4 - Calculate coefficients for planar correction function. Enable planar correction.
CCB Z=5 - Disable planar correction.

CCB Z=6 - Displays actual planar corrected current Z position as raw encoder counts.

Note: `WHERE Z` displays the target position of Z based on the most recently sent `MOVE`, `MOVREL`, or HERE command.

CCB Z=7 - Re-initialize to zero all planar correction variables including `x1, y1, z1 … x3, y3, z3` and planar correction function coefficients. Disable planar correction.

CCB Z=8 - Return the current planar correction state, Z if enabled, G if disabled. MS-2000 firmware v9.54 required

CCB Z=9 - Return the limit check status character. The limit status does not show up on the LCD.

The planar correction index will not move past the stage limits set by the SU and SL commands.

Character	Description
N	Not at either limit
U	At the upper limit
L	At the lower limit

CCB Z=10 - Displays actual planar corrected current Z position in ASI units (1/10th of a micron). MS-2000 firmware v9.60 required

Examples

Enable planar correction, check z position, and check if planar correction is enabled.

```
CCB Z=4
:A
CCB Z=6
:A Z=12345
CCB Z=8
:A Z
```

Send the planar correction points through serial commands and enable planar correction.

```
CCB T=1
:A
CCB X=0 Y=0 F=0
:A
CCB T=2
:A
CCB X=10000 Y=0 F=1000
:A
CCB T=3
:A
CCB X=10000 Y=10000 F=1000
:A
CCB Z=4
:A
```

Version History

Version		
MS	**TG**	**Description**
9.60	-	Set planar correction points through serial commands
9.60	-	CCB Z=10 displays actual planar position in ASI units
9.54	-	CCB Z=8 displays the planar correction state

Command:DACK (D)

Motorized Actuator

MS2000 or RM2000 syntax

Shortcut	D
Format	D [axis]=[ratio in mm/sec] ...
Units	ratio in mm/sec
Remembered	Using SS Z

Tiger syntax

Shortcut	D

Format	D [axis]=[ratio in mm/sec] ...
Units	ratio in mm/sec
Type	Axis-Specific
Remembered	Using [addr#]SS Z

Sets motor speed control ratio, in mm/sec, of movement per DAC count. A DAC count is a value change of one (1) in the 8-bit integer written to the motor speed control register. **MOST USERS DO NOT NEED THIS FUNCTION!**

Example:

```
D X=.055
:A
D X?
:A X=0.055000
```

Incrementing/decrementing the motor speed control register by one DAC count increases/decreases X-axis stage speed by 0.055 mm/sec.

MicroMirror

Shortcut	D
Format	D [axis]=[0 to 1] ...
Units	Unitless float between 0 and 1
Type	Axis-Specific
Remembered	Using [addr#]SS Z

This command is “recycled” for a different use in MicroMirror axes than for motor axes. For MicroMirror axes it sets up a calibration constant or scale factor that is used to attenuate the scanner motion when used in internal input mode (as the implementation is in software it does not apply in external input mode). In tests we found that the two axis of the MEMS MicroMirror does not tilt by the same amount when similar inputs are applied. This may be critical for some applications. This parameter sets an attenuation, so both axes can be made to tilt the same amount. For example, if the S axis was found to be doing 85% travel of R axis then we could attenuate R to compensate by setting `D R=0.85 S=1`. Note that behavior is undefined if changed in the middle of a single-axis move or SPIM move on the same axis. **N.B: This command was retired in v3.14 of the firmware because it wasn't being used and the internal implementation was complex.**

Example:

```
D R=0.85 S=1
:A
```

Attenuates the travels of R axis by 15%.

Command:DUMP (DU)

MS2000 or RM2000 syntax

Shortcut	DU
Format	DUMP [X][Y][F][R=mode][T=interval]
Units	None

Tiger syntax

Shortcut	DU
Format	[addr#]DUMP [X][Y][F][R=mode][T=interval]
Units	None
Type	Card-Addressed

Dump internal buffers to serial output.

The size of the dump buffer is reduced if the RING BUFFER firmware module is included in the build.

The Tiger and MS-2000 controller has several built-in diagnostic capabilities that are useful for troubleshooting difficulties. It is often useful to see how well the servo motion is tracking the theoretical trajectory. The controller has a built-in buffer that can hold 200 to 500 move steps. For best results, restrict testing to a single axis at a time; otherwise information from multiple axes will be interleaved in the dump buffer. Any motion from any axis will write information into the dump buffer until it is full.

No Arguments: DU dumps the Trajectory Buffer.

X: `DU X` clears the trajectory buffer and error buffer.

Y: `DU Y` dumps the Error Buffer. See Error Codes for MS2000, RM2000 and TG-1000 Diagnostics.

F: `DU F` Prints controller log, it has information like the total time the controller was on, the total distance the XY stage has traveled and others. The log first has to be initialized with command DU F=999. This is done in the factory, and we suggest users not reset the log as it may wipe data that is useful for later reliability tracing.

Tiger v3.19 or MS-2000 v9.54 required
R: `DU R=mode` sets the trajectory buffer mode. Mode 0 (default) means the trajectory buffer, once full, will not be changed further. Mode 1 continuously overwrites the trajectory buffer information so that the most recent move information is always present.

Tiger v3.19 or MS-2000 v9.54 required
T: `DU T=interval` sets the sampling interval for the trajectory buffer. Default is 1 which adds to the trajectory buffer on every axis loop. Setting to e.g. 10 will add to the buffer once and then skip the next 9 axis loops. Handy for looking at longer-term trends. The axis loop time can be queried with the INFO command, there is a `Servo Lp Time` entry.

Tiger Example

1DU X Clears the dump buffers on Card 1

Then make a short move, e.g.: M X=12345 [Moves about 1.23 mm]
After the move is complete, you can dump the buffer to the screen:
1DU Dumps Trajectory Buffer on Card 1
2DU Y Dumps Error Buffer on Card 2
4DU F Dumps Card 4's Piezo History
4DU F=999 Resets Card 4's Piezo History

```
2DU Y
Adr:2:ZF
       0        0        0        0        0        0
0        0        0        0        0        0        0
0        0        0        0        0        0        0
0        0        0        0        0        0        0
0        0        0        0        0        0        0
0        0        0        0        0        0        0
0        0        0        0        0        0        0
0        0        0        0        0        0        0
0        0        0        0        0        0        0
0        0
```

MS2000 Example

DU X Clears the dump buffers
Then make a short move, e.g.: M X=12345 [Moves about 1.23 mm]
After the move is complete, you can dump the buffer to the screen:
DU Dumps Trajectory Buffer
DU Y Dumps Error Buffer
DU F Dumps Piezo History
DU F=999 Resets Piezo History

```
DU Y
       0        0        0        0        0        0
0        0        0        0        0        0        0
0        0        0        0        0        0        0
0        0        0        0        0        0        0
0        0        0        0        0        0        0
0        0        0        0        0        0        0
0        0        0        0        0        0        0
0        0        0        0        0        0        0
0        0        0        0        0        0        0
0        0        0        0        0        0        0
0        0
```

Version History

Version		
MS	**TG**	**Description**
9.54	3.19	DU Y and DU R commands added

Version		
MS	**TG**	**Description**
9.50	-	DU F ends with <CR><LF> on MS-2000

Command:ENSYNC (ES)

MS2000 or RM2000 syntax

Shortcut	ES
Format	ENSYNC [axis] = [position in mm]...
Units	Position in millimeters
Remembered	Using SS Z

Tiger syntax

Shortcut	ES
Format	ENSYNC [axis] = [position in mm]...
Units	Position in millimeters
Type	Axis-Specific
Remembered	Using [addr#]SS Z

This command lets the user set a position, in millimeters - absolute, which will toggle the TTL-level SYNC output when the stage crosses that position. When ENSYNC is issued, the SYNC output is reset low. Whenever the stage crosses the ENSYNC position, the output will toggle low to high and if crossed again, from high to low. ENSYNC will only work with one axis at a time, either X or Y and depends on how JP1 is jumped (JP4 on Tiger/LX cards).

Note that the position “wraps” every 2^{24} encoder counts, which is only a concern for very long travel stages and/or for very fine encoders.

See the SCAN MODULE documentation for more details.

Minus

If you send the command with the minus sign ES `<axis>-` it will set the SYNC output to low.

This feature is available on MS2000 v9.52 and Tiger v3.46 firmware.

On MS2000

The TTL SYNC output is available on SV1 Pin 7.

MS-2000 Board Jumpers		Fast Axis	
Function	**Jumper**	**X**	**Y**
Sync Flag	JP1	1-2	2-3

Contact ASI for additional details on these modifications.

On Tiger

Dual Axis Card Rev F3 and above required (TGDCM2). The SYNC signal is routed to the backplane (C13 or C14) and is also available directly from JP4 for LX cards. Additional hardware is needed to expose the signal.

Contact ASI for additional details on these modifications.

Note: the position is reported in millimeters rather than tenths of microns.

Warning: prior to MS-2000 v9.52, ES <axis>? was expressed in encoder counts, not millimeters.

Warning: prior to MS-2000 v9.55, ES <axis>=# would set the value in encoder counts, not millimeters. This only applies to the CRISP focus axis. Other axes are still set in millimeters.

Command:EPOLARITY (EP)

MS2000 or RM2000 syntax

Shortcut	EP
Format	EPOLARITY [axis]=[-1 or 1]...
Units	Integer (-1 or +1 only)
Remembered	Using SS Z

Tiger syntax

Shortcut	EP
Format	EPOLARITY [axis]=[-1 or 1]...
Units	Integer (-1 or +1 only)
Type	Axis-Specific
Remembered	Using [addr#]SS Z

Possible values are `-1` and `1`. Adapts the firmware to the counting direction of the motor encoders. This setting is normally set by ASI and not changed.

See also CUSTOMA Z command which allows changing polarity of the coordinate system. Normally it is better to change that rather than the `EPOLARITY` setting.

Command:ERROR (E)

Motorized axis

MS2000 or RM2000 syntax

Shortcut	E
Format	ERROR [axis] = [position in mm]...
Units	Millimeters
Remembered	Using SS Z

Tiger syntax

Shortcut	E
Format	ERROR [axis] = [position in mm]...
Units	Millimeters
Type	Axis-Specific
Remembered	Using [addr#]SS Z

This command sets the Drift Error setting. This setting controls the crossover position error (in millimeters) between the target and position at which the controller considers an axis to be too far out of position when resting. When this limit is reached, the controller will re-attempt to move the axis back within the Finish Error (PC) limit. The current value for this setting can be viewed using the `INFO` command or by placing a ? after the axis name. Entries of zero value, e.g., `ERROR X=0` are ignored.

Example

```
E X=0.0004
:A
E X?
:X=0.000400 A
```

Input values equal to or less than zero are acknowledged by :A , but ignored.

The command in this example would cause the controller to consider a difference between the target and the current position greater than 400nm to be too large. If this large of an error were detected, the controller would re-engage the move algorithm to place the position error back inside of the Finish Error (PC) limit.

WARNING: Make sure that the drift error **ERROR (E)** value is significantly larger than the value for **PCROS (PC)**. Otherwise an landing might initially be considered complete but then afterwards lead to drift correction moves.

For firmware built after Aug 2023 (v3.42 for Tiger) the E value is automatically set to at least 1.2x the PC value

whenever PC is changed.

TGPMT card

Shortcut	E
Format	ERROR [axis]=[0 to 5]...
Units	Integer code
Type	Axis-Specific
Remembered	Using [addr#]SS Z

On a TGPMT card, ERROR command has a different purpose and function. ERROR command sets the ADC averaging's sample size. Its a card wide setting, that affects both the PMT tubes. This only affects the value reported with the RDADC command. The Analog signal output on the BNC isn't affected.

ERROR [axis]=	Simple Moving Average sample size
0	1 Avg routine disabled, reports RAW reading
1	2
2	4
3	8
4	16
5	32

Example

If TGPMT card axis is **M**

```
E M=2
:A
```

Sets the ADC averaging routine sample size to 4.

```
E M?
:M=2.000000 A
```

Query the TGPMT card for ADC averaging routine sample size, 2 is reported, hence sample size is 4.

MicroMirror card

Shortcut	E
Format	ERROR [axis]=[correction in %]...
Units	Integer code
Type	Axis-Specific
Remembered	Using [addr#]SS Z

On a Micromirror card ERR0R command has a different purpose and function. It sets the amount of bow correction applied to the axis. It is specified in units of percent deflection of the paired axis when the specified axis is at full deflection. The sign indicates whether a positive or

negative deflection will be applied to the paired axis. It was introduced in Tiger firmware v3.18 along with the bow correction described below.

Bow is an optical effect where the motion of a scanned beam takes on a slightly curved shape whenever the axis of the moving mirror's rotation is not orthogonal to the plane formed by input and output beams. Because the MEMS mirror inside the ASI scanner tilts in two dimensions, at least one axis will be subject to this effect. In a typical ASI light sheet scanner, the motion of the “fast axis” (e.g. the axis that is scanned to make a light sheet) will deflect slightly in the slow axis during scanning, whereas the motion of the slow axis is unaffected by the bow phenomenon. To counteract this optical effect, starting in firmware v3.18 the firmware applies a small opposite correction to the slow axis as the fast axis moves, and the magnitude of this correction is specified by the ERR0R command. The correction is quadratic relative to the displacement from the center of the mirror range (generally position 0), so maximum correction is applied at the edge of the mirror range.

The default is -2% for the “fast axis” and 0.0 for the “slow axis” in each axis pair because this seems to be about right for a typical ASI scanner. This means that the slow axis position will be adjusted as the fast axis moves but not vice versa. The bow correction is applied during regular commanded moves, during single axis commands, and during the SPIM state machine. In the SPIM state machine it is assumed that only the fast axis has a non-zero bow correction coefficient.

The allowable range of correction is between -6.22% to +6.22%.

Tunable Lens Card

Shortcut	E
Format	ERROR [axis]=[DPT to DAC coefficient]...
Units	Float
Type	Axis-Specific
Remembered	Automatically

On a Tunable card ERR0R command has a different purpose and function. It sets the relation between the DAC (current) and Tunable lens's Diopter. It's used to compensate for temperature drift. More details can be found here.

Command:EXTRA (EX)

MS2000 and RM2000 Syntax

Shortcut	EX *requires v9.53*
Format	EXTRA [X?] [Y?] [Z=lock_ki] [M=button_code] [R=small_enc] [T?]
Remembered	Using SS Z

Tiger Syntax

Shortcut	EX *requires v3.51 (Tiger Comm)*
Format	[Addr#]EXTRA [X?] [Y?] [Z=lock_ki] [M=button_code] [R=small_enc] [T?]

Type	Card-Addressed
Remembered	Using [Addr#]SS Z

X? Provides the CRISP bottom line string as is shown on the LCD display.

Y? Returns the SNR value shown on the LCD after log amp calibration.

The **Z** argument sets the integral error servo parameter. The default is 1. Higher values may improve speed settling but can also generate instability. Use sparingly.

This is also the `lock_ki` value for CRISP. When CRISP enters the lock state (LK F=83) it changes the KI Z value for the Z axis. KI Z is restored to the initial value when CRISP enters the stop state (LK F=79).

When CRISP restores KI Z after using lock_ki, it uses a saved value that is set only once when the controller powers on. If you want to change KI Z, use SS Z and power cycle the controller so that it can restore KI Z to the correct value. It is not recommended to set KI Z unless you are an advanced user.

MS-2000 9.2p or Tiger v3.42 required
T?: The controller detects the resolution of the ADC during initialization.

Code	DAC	CPU
0	10-bit ADC	C8051F122
1	12-bit ADC	C8051F120

MS-2000 9.2n or Tiger v3.36 required
M? Returns the `button_flag_byte` and resets the value to 0.

M=# Modify the `button_flag_byte` with the button code and call the button functions associated with that code.

This command differs from BE F which does not modify the `button_flag_byte` and only calls a single button function.

Additional Details About M?

The `button_flag_byte` stores the state of the last detected button press for each button. When the controller is powered on, the value is initialized to 0. As the user presses buttons the value of the `button_flag_byte` changes, it is important to note that this value only changes when you **release** the button.

After receiving the EXTRA M? command, the internal value on the controller is reset to 0, enabling you to detect new button presses.

If a button has already been pressed, and then is pressed again, the new state overwrites the old state for that button. Example: if you do a `Normal Press` and then a `Long Press` on the `Joystick Button`, the next time you send the “EXTRA M?” command the state of the `Joystick Button` will be `Long Press`.

Zero/Halt button presses only have the states 0 and 1. (Not Pressed and Normal

Press)

The `button_flag_byte` is divided into four `2-bit` sections that each contain the state of a button:

Bits	Button
1-2	@ Button
3-4	Home Button
5-6	Joystick Button
7-8	Zero/Halt Button

Each `2-bit` section can take on the values `0-3`, these codes represent the state of the button.

Decimal	Binary	State
0	`00`	Not Pressed
1	`01`	Normal Press
2	`10`	Long Press
3	`11`	Extra Long Press

Example:

1. @ Button Normal Press
2. Home Button Long Press
3. Joystick Extra Long Press
4. Zero/Halt Normal Press
5. Send serial command EXTRA `M?`

Results of steps `1-5` in binary:

1. `button_flag_byte = 00 00 00 01`
2. `button_flag_byte = 00 00 10 01`
3. `button_flag_byte = 00 11 10 01`
4. `button_flag_byte = 01 11 10 01`
5. `button_flag_byte = 00 00 00 00(serial command reset)`

Example Python code for extracting button states from the button_flag_byte:

Python Parse Button Flag

```
# the value returned from EXTRA M?
button_flag_byte = 127

# bit masks
mask_at   = 0x03 # 00000011
mask_home = 0x0C # 00001100
mask_js   = 0x30 # 00110000
mask_zero = 0xC0 # 11000000
```

```
# get the button states from button_flag_byte
btn_at   = button_flag_byte & mask_at
btn_home = (button_flag_byte & mask_home) >> 2
btn_js   = (button_flag_byte & mask_js) >> 4
btn_zero = (button_flag_byte & mask_zero) >> 6

# show the results in decimal and binary
print(f"{button_flag_byte = } (binary {button_flag_byte :08b})")
print(f"{btn_at = } (binary {btn_at:02b})")
print(f"{btn_home = } (binary {btn_home:02b})")
print(f"{btn_js = } (binary {btn_js:02b})")
print(f"{btn_zero = } (binary {btn_zero:02b})")

# console output:
# button_flag_byte = 127 (binary 01111111)
# btn_at = 3 (binary 11)
# btn_home = 3 (binary 11)
# btn_js = 3 (binary 11)
# btn_zero = 1 (binary 01)
```

Additional Details About M=button_code

This function allows you to simulate button presses programmatically through a serial command.

This command modifies the `button_flag_byte` and calls the button functions associated with that button code.

The button codes are the same values that are returned by EXTRA `M?`. The input value is clamped to the range: 0-127.

If a button code represents multiple button presses then the button functions will be called in the order ⇒
@, Home, Joystick, Zero/Halt (LSB ⇒ MSB)

You can expect the same behavior as if you were pressing physical buttons ⇒

1. Send the command EXTRA `M=3`: `button_flag_byte` = 3, @ Extra Long Press button function called.
2. Send the command EXTRA `M=1`: `button_flag_byte` = 1, @ Normal Press button function called.
3. Send the command EXTRA `M=5`: `button_flag_byte` = 5, @ Normal Press and Home Normal Press button functions called.

This demonstrates that button presses are overwritten as if you were interacting with the physical controller pressing buttons.

Example Python code for creating a button_flag_byte:

Python Create Button Flag

```
def create_button_code(at: int = 0, home: int = 0, joystick: int = 0,
zero_halt: int = 0) -> int:
    assert at in range(4), "Must be in the range 0-3."
    assert home in range(4), "Must be in the range 0-3."
    assert joystick in range(4), "Must be in the range 0-3."
    assert zero_halt == 0 or zero_halt == 1, "Must be 0 or 1."

    button_code = 0

    # bit masks
    BITMASK_AT   = 0x03 # 00000011
    BITMASK_HOME = 0x0C # 00001100
    BITMASK_JS   = 0x30 # 00110000
    BITMASK_ZERO = 0xC0 # 11000000

    # set bits
    button_code &= ~BITMASK_AT
    button_code |= at & BITMASK_AT

    button_code &= ~BITMASK_HOME
    button_code |= (home << 2) & BITMASK_HOME

    button_code &= ~BITMASK_JS
    button_code |= (joystick << 4) & BITMASK_JS

    button_code &= ~BITMASK_ZERO
    button_code |= (zero_halt << 6) & BITMASK_ZERO

    return button_code

def main():
    button_code = create_button_code(at=1, home=1)
    print(button_code)
    # prints 5
if __name__ == "__main__":
    main()
```

Command:HALT (\)

MS2000 or RM2000 syntax

Shortcut	\ (the backslash character)
Format	HALT

Tiger syntax

Shortcut	\ (the backslash character)
Format	HALT
Type	Broadcast or Card-Addressed Command

This command will stop all active motors and other actuators too. If there are no errors, a positive reply of :A will be returned. If the HALT command is given while a commanded move is in motion, the controller will reply with the :N-21 error.

Additional Notes for Tiger cards

It's usually a `Broadcast Command` but can be used as a `Card-Addressed Command` as well. When addressed to a specific card, it stops motion on that card only. Note that to use as a `Card-Addressed Command` the full command `HALT` must be used instead of the shortcut \, because \ is handled quickly in the command parser.

Command:HERE (H)

The 'here' command differs on a TGPMT card from our other systems.

Actuators, Piezos, MicroMirror etc

MS2000 or RM2000 syntax

The HERE command sets the current reported position(s) of the axis(es) provided.

Shortcut	H
Format	HERE [axis]=[position in 1/10 microns]...
Units	1/10 microns
Remembered	Automatically

Tiger syntax

Shortcut	H
Format	HERE [axis]=[position in 1/10 microns] or see below for clocked devices
Units	1/10 microns
Type	Axis-Specific
Remembered	Automatically

Assign the specified number to the axis’s current position buffer. If no position is specified, 0 is assumed. For non-clocked devices, the unit of measurement is in tenths of microns. This defines the current position to be a specific distance from the origin (0).

Clocked Devices:

On clocked devices (filter slider, turret, mirrored port switch, etc), you can *change position #1* or you can *change the spacing between positions*.

Change position #1: MS-2000 v9.2l or Tiger v3.18 required

1. Remove all axes from either the joystick or a knob (for example, the Z-axis from the Z-knob J Z=0).
2. Assign the clocked device axis to that joystick or knob (for example, the M-axis to the Z-knob J M=22).
3. Use the joystick or knob to adjust the axis to the desired position.
4. Issue the HERE command to set the position (for example, the M-axis H M=1).
5. Restore (assign and unassign) the desired axes to the joystick / knobs as desired (for example, the M-axis from and the Z-axis to the Z-knob J M=0 Z=22).

Change the spacing between positions: MS-2000 v9.2m or Tiger v3.28 required

1. Move to position #2 (for example, the M-axis M M=2).
2. Remove all axes from either the joystick or a knob (for example, the Z-axis from the Z-knob J Z=0).
3. Assign the clocked device axis to that joystick or knob (for example, the M-axis to the Z-knob J M=22).
4. Use the joystick or knob to adjust the axis to the desired position.
5. Issue the HERE command to set the spacing (for example, the M-axis H M+).
6. Restore (assign and unassign) the desired axes to the joystick / knobs as desired (for example, the M-axis from and the Z-axis to the Z-knob J M=0 Z=22).

If there are no errors, the positive reply :A will be sent back from the controller

Warning! DOES NOT WORK FOR PIEZOS AND MICROMIRRORS.

Example

```
H X=1234 Y=4321 Z
:A
```

The X position will change to 123.4 microns from the origin, Y will change to 432.1 microns, and the Z will be zeroed.

TGPMT usage

Shortcut	H
Format	`HERE [axis]` or `HERE [axis]=0`
Type	Axis-Specific
Remembered	Automatically

On a TGPMT card, this command this used to Zero the PMT signal reported by the RDADC command. When this command is issue, the current PMT signal is saved, and the controller begins subtracting it from the current PMT signal. Users can use this as a background subtract or offset feature.

User can cancel the zeroing by issuing HERE `[axis]=0`. Readings reported by RDADC

command will not be altered anymore.

Only the readings reported by the RDADC command are altered. 0-4V Analog PMT signal on the BNC connector is not altered.

This is a card wide-settings, both PMT0 and PMT1's reading are altered.

More details here.

Example

```
H M
:A
```

If the TGPMT card axis char is **M**. Saves the current PMTs readings and starts subtracting them from the RDADC commands reported readings.

```
H M=0
:A
```

If the TGPMT card axis char is **M**. Clears the saved PMTs readings and stops subtracting them from the RDADC commands reported readings.

Command:HOME (!)

MS2000 or RM2000 syntax

Shortcut	! (the exclamation point character)
Format	HOME axis [axis] [axis] ...

Tiger syntax

Shortcut	! (the exclamation point character)
Format	HOME axis [axis] [axis] ...
Type	Axis-Specific

Executes a halt and then moves specified axis motors toward their HOME position. The default location for the HOME position (1000 mm) is far past the positive limit of the stage travel. If a hardware or firmware limit switch is encountered, the motor will stop.

If there are no errors, an :A is returned.

Warning! This is not the same thing as pressing the physical **HOME** button on the controller, which moves all axes to the zero position. You can use the **MOVE** command to move each axis to zero, e.g. **MOVE X Y**.

Example

```
! X Y Z
:A
```

The X, Y and Z axis motors will start moving towards the HOME position, a HALT command will stop the motors.

Note: The stage will be positioned at the limit switches or at the previously defined HOME position at the completion of this command. See the SETHOME command for how to change the HOME position.

Command:INFO (I)

MS2000 or RM2000 syntax

Shortcut	I
Format	INFO [axis]

Tiger syntax

Shortcut	I
Format	INFO [axis]
Type	Axis-Specific

This command returns the current values of various variables and constants that control the way the specified axis performs, as well as its current status.

Example

```
I X
Axis Name ChX:         X         Limits Status: f
Input Device :      JS_X [J]     Axis Profile :STD_CP_ROT
Max Lim      :   110.000 [SU]    Min Lim      :  -110.000 [SL]
Ramp Time    :       100 [AC] ms Ramp Length  :     25806 enc
Run Speed    :   5.74553 [S]mm/s vmax_enc*16  :     12520
Servo Lp Time:         3      ms Enc Polarity :         1 [EP]
dv_enc       :       368         LL Axis ID   :        24
Drift Error  :  0.000400 [E]  mm enc_drift_err:        18
Finish Error :  0.000024 [PC] mm enc_finsh_err:         1
Backlash     :  0.040000 [B]  mm enc_backlash :      1815
Overshoot    :  0.000000 [OS] mm enc_overshoot:         0
Kp           :       200 [KP]    Ki           :        20 [KI]
Kv           :        15 [KV]    Kd           :         0 [KD]
Axis Enable  :         1 [MC]    Motor Enable :         0
CMD_stat     :   NO_MOVE         Move_stat    :      IDLE
Current pos  :    0.0000      mm enc position :         0
Target pos   :    0.0000      mm enc target   :         0
```

```
enc pos error:         0         EEsum        :         0
Lst Stle Time:         0      ms Av Settle Tim:         0 ms
Home position:   1000.00      mm Motor Signal :         0
mm/sec/DAC_ct:   0.06700 [D]     Enc Cnts/mm  :  45397.60 [C]
Wait Time    :         0 [WT]    Maintain code:         0 [MA]
```

The `INFO` dump shows command shortcuts inside the square brackets, which you can use to change parameters, where applicable.

Command:JOYSTICK (J)

MS2000 or RM2000 syntax

Shortcut	J
Format	JOYSTICK [axis]± or JOYSTICK [axis] = [Manual Input #]
Units	Integer, see table below
Remembered	Using SS Z

Tiger syntax

Shortcut	J
Format	JOYSTICK [axis]± or JOYSTICK [axis] = [Manual Input #]
Units	Integer, see table below
Type	Axis-Specific
Remembered	Using [addr#]SS Z

This command enables (+) or disables (–) the input from the default manual control device for the axis (joystick or knob). If you specify an input device number dev, the axis specified will be connected to that input device

Table 1: Valid device assignments

Code	Manual Input Device	Description
0	NONE	
1	DEFAULT	
2	Joystick – X deflection	X-axis default
3	Joystick – Y deflection	Y-axis default
4	Standard Control Knob	Z-axis default for MS-2000
5	X-Wheel	Special hardware required
6	Y-Wheel	
7	ADC CH1 – For ADC_FOLLOW or ADC_LOCK operation.	
8	Foot switch	
9	JX and X-wheel combo	Special hardware required
10	JY and Y-wheel combo	

Code	Manual Input Device	Description
11	CRISP knob	Used for CRISP system
22	Z-Wheel	TG-1000 only, right side of joypod
23	F-Wheel	TG-1000 only, left side of joypod
100	Add to any other code to make the setting savable with SS Z command	

If there are no errors, the positive reply :A will be returned from the controller

Example

```
J X+ Y+ Z-
:A
```

The above command enables the default X and Y joystick control and disables the Z control knob.

```
J X? Y?
:A X=2 Y=3
```

The above query and reply shows that the X & Y axes use the X & Y joystick driver.

```
J *?
```

The above command queries all axes.

```
J *
```

The above command clears all axes from the joystick and knobs (TG-1000 only, firmware version 3.10 and later)

To set a default value that can be saved in non-volatile memory, add 100 to the argument and execute a `SAVESET` command.

```
J X=105
:A
```

This makes X-Wheel the default X axis manual control device. This is a setting that can be saved with the SAVESET command.

```
J X?
:A X=2
J X=1
:A
RESET
J X?
:A X=2
J X=105
:A
J X?
```

```
:A X=5
1SS Z
:A
RESET
J X?
:A X=5
```

In this session, the default manual input device is changed to X-Wheel. Sets the manual input device to whatever the default value is, which is now X-Wheel (5). Saves the settings. After the reset, the manual input device is set on startup its new saved default value, X-Wheel.

Command:JSSPD (JS)

MS2000 or RM2000 syntax

Shortcut	JS
Format	JSSPD [X=fast] [Y=slow] [Z=knob_speed] [F=xy_knobs_fast] [T=xy_knobs_slow]
Units	Integer
Remembered	Using SS Z

Tiger syntax

Shortcut	JS
Format	[Addr#]JSSPD [X=fast] [Y=slow] [Z=knob_speed] [F=xy_knobs_fast] [T=xy_knobs_slow]
Units	Integer
Type	Card-Addressed
Remembered	Using [addr#]SS Z

This command sets the relative motor speed for maximum deflection of the joystick to the values specified.

Values between 0.1 and 100 (%) are acceptable, or -100 to -0.1 (negative setting reverses the direction). (Alternatively on Tiger the joystick direction can be set using the CUSTOMA Z command, parameters 22-25).

Pressing the joystick button toggles between the fast and slow settings by default.

X: Set the joystick fast speed at max deflection.

Y: Set the joystick slow speed at max deflection.

MS-2000 required
Z: `knob_speed` is a signed value that sets the relative speed and direction of the encoder knob (not commonly used on TG-1000, only very old builds).

F/T: `xy_knobs_fast` and `xy_knobs_slow` are used to set the fast and slow speeds for XY_KNOBS and ZF_KNOB, which respond to input from the two knobs on the side of the TG-1000 joystick. Note this is different from MS-2000 where the F parameter sets the slow speed and the fast speed is equal

to the slow speed multiplied by the T parameter raised to the third power. Prior to Tiger firmware v2.87 the implementation for F and T was the same as MS-2000.

If there are no errors, the positive reply :A will be sent back from the controller.

Tiger Example

```
1JS X? Y?
:A X=80.000000 Y=3.000000
```

MS2000 Example

```
JS X? Y?
:JS_FAST=80.000000 JS_SLOW=3.000000 A
```

Note: On MS-2000 firmware prior to v9.54, JS X? and JS Y? only report 2 decimal places of precision.

Command:KA

Tiger Syntax

Shortcut	KA
Format	KA [axis]=n...
Units	unitless integer
Type	Axis Specific
Remembered	Using [Addr#]SS Z

MS2000 and RM2000 Syntax

Shortcut	KA
Format	KA [axis]=n...
Units	unitless integer
Remembered	Using SS Z

Adjusts acceleration gain parameter in the servo loop where n is a signed integer. The default value is `0`. **MOST USERS DO NOT NEED TO USE THIS FUNCTION!**

Note: Before `Tiger v3.20` and `Whizkid 9.2l`, the KA and KADC commands adjusted the overall servo gain. KADC was primarily used for `CRISP`. The KA command sets the servo acceleration gain feed forward constant. The LR T command replaced KADC for `CRISP`.

```
KA Z?
:A Z=0
```

Command:KD

Motorized Axis

MS2000 or RM2000 syntax

Shortcut	KD
Format	KD [Axis]=###
Units	Integer
Remembered	Using SS Z

Sets the servo derivative error term constant, the integer value KD. Usually set to zero (0). Especially useful when inertia is a factor to improve settling time and stability.

MOST USERS DO NOT NEED TO USE THIS FUNCTION!

Tiger syntax

Shortcut	KD
Format	KD [Axis]=###
Units	Integer
Type	Axis-Specific
Remembered	Using [addr#]SS Z

Sets the servo derivative error term constant, the integer value KD. Usually set to zero (0). Especially useful when inertia is a factor to improve settling time and stability.

Prior to Tiger v3.46 setting this value would double the input.

MOST USERS DO NOT NEED TO USE THIS FUNCTION!

Command:KI

MS2000 or RM2000 syntax

Shortcut	KI
Format	KI [Axis]=### …
Units	integer
Remembered	Using SS Z

Tiger syntax

Shortcut	KI
Format	KI [Axis]=### …

Units	integer
Type	Axis-Specific
Remembered	Using [addr#]SS Z

Sets the servo integral error term constant, the integer value ki. Larger values of ki reduce the time for small errors to be corrected at the finish of a move, but decreases stability if set too large.

MOST USERS DO NOT NEED TO USE THIS FUNCTION!

Command:KP

MS2000 or RM2000 syntax

Shortcut	KP
Format	KP [Axis]=### …
Units	integer
Remembered	Using SS Z

Tiger syntax

Shortcut	KP
Format	KP [Axis]=### …
Units	integer
Type	Axis-Specific
Remembered	Using [addr#]SS Z

Sets the servo proportional error term constant, the integer value kp. Larger values of kp increase the stiffness of the response to loss of position, but decreases stability if set too large.

MOST USERS DO NOT NEED TO USE THIS FUNCTION!

Command:KV

Tiger Syntax

Shortcut	KV
Format	KV [axis]=n…
Units	unitless integer
Type	Axis Specific
Remembered	Using [Addr#]SS Z

MS2000 and RM2000 Syntax

Shortcut	KV
Format	KV [axis]=n…
Units	unitless integer

Remembered	Using SS Z

Adjusts motor gain parameter in the servo loop where n is a signed integer. Default depends on motor and leadscrew pitch but is generally within 10% of the ideal value. Ideal value will change with speed setting, especially when AA is far from maximum.

** MOST USERS DO NOT NEED TO USE THIS FUNCTION! **

```
KV Z?
:A Z=39
```

```
KV Z=40
:A
```

Command:LCD

Supported on MS2000 only

Shortcut	LCD
Format	LCD “string”
Units	ASCII Characters

Displays the quoted string on the bottom line of the LCD in place of the version information (DIP SWITCH #2 DOWN).

The quotes are syntactically required. If the quotes are not present, or one is missing, then the command will clear the LCD line. This command is write-only and will not return the contents of the LCD line if queried.

LCD “my super string” causes the last line of the LCD to be updated to: my super string

However, if issued this command: LCD my serial string or LCD ? or just LCD, then the last line of the LCD display will be cleared (with no characters present).

Command:LED

On Tiger with Two Axis Card

Format	[Addr#]LED X=[0 to 100]
Type	Percentage between 0 and 100
Remembered	Using [Addr#]SS Z
Firmware Required	STD_XY_LED

Sets the brightness of ASIs LED illuminator by generating PWM through TTL out. TTL out mode should be set to ‘9’ (i.e. TTL Y=9). Enable out from the LED illuminator should be connected to TTL out on controller. This setting can be saved in non-volatile memory using the SAVESET

command. The PWM frequency is 1.3KHz. It's a Card-Addressed command.

The LED command has a slightly different format on a TGLED card. Refer to TGLED card user guide for more details.

Note: If you are encountering flickering, try adjusting your shutter speed to integer multiples of the PWM period (0.77 ms).

On Tiger and TGLED card

Format	[Addr#]LED X=[1 to 100] Y=[1 or 100] Z=[1 or 100] F=[1 or 100]
Type	Percentage between 0 and 100
Remembered	Using [Addr#]SS Z

This command is "recycled" for a slightly different use in TGLED than for other cards . In the context of a TGLED card this command is used to set the individual brightness percentage of the LEDs connected to the card. Setting the brightness to 0% results in LED to be off. Setting the brightness to 50% results the in the LED being driven with PWM with 50% duty cycle. Setting the percentage to be 100% results in the LEDs to turn on fully.

X sets the brightness for LED connected to channel 1, Y sets the brightness for LED connected to channel 2, Z sets the brightness for LED connected to channel 3, and F sets the brightness for LED connected to channel 4.

Default is 50.

Example

```
1LED X=10 Y=50 F=0
:A
```

Sets the Brightness of LED connected to Channel #1 to be 10% , Channel #2 to be 50% and Channel #4 to OFF. Brightness of Channel #3 will be unchanged.

```
1LED X? Y? Z? F?
X=10 Y=50 Z=50 F=0 :A
```

Queries the card for Brightness of LEDs connected to Channel #1,#2,#3 and #4

On Tiger with Micro-mirror card

Format	[Addr#]LED X=[output] Y=[switich_time] Z=[laser_mode] R=[Side0_state] T=[Side1_state]
Type	Integer (see below)
Remembered	Using [Addr#]SS Z
Firmware Required	MM_LASER_TTL

The LED commands are used to control the laser outputs of the card (Micro-mirror card backplane connectors, usually output by the Programmable Logic Card or TTL card in early

versions). The origin of these commands was for MM_SPIM firmware, but a separate define MM_LASER_TTL was created so that it could be used in other situations as well. This documentation for v2.88+, though the Y parameter was added ~v2.86. In general these only apply when the auxiliary TTL output mode is set to 1 (TTL T) and when the SPIM state machine is not running.

output (**X**): selects which logical laser is on when the SPIM state machine is not running. The exact hardware output depends on bits 0-2 of the LED Z setting. X=0 means neither laser is on, X=1 means the Side0 laser is on, X=2 means the Side1 laser is on, and X=3 means both lasers are on (LED Y setting applies in this case). Requires TTL T (aux_IO_mode) setting to be 1. Setting is overridden during SPIM state machine operation.

switch_time (**Y**): sets the switching time in ms between the laser outputs when the SPIM state machine is not running and when both lasers are active per the LED X command. Used to simulate the effect of a passive 50/50 beam splitter, which is particularly useful during alignment. Default is 10ms, cannot be set less than 1ms.

laser_mode (**Z**): determines the behavior of the laser TTL outputs, both when using the LED settings and also during the SPIM state machine.

- Bits 0-2 form a code 0-7 selecting how the logical laser outputs are converted to physical TTL outputs. Setting should correspond to the physical hardware connected to the laser TTL outputs. Specifically
  - code 0 for individual laser shutters for the two sides (default until v3.01)
  - code 1 for single laser with side switch (Side0 is laser shutter for both sides and Side1 is high when the second side is active) (default v3.01+)
  - code 2 for Side0 high when the first side of SPIM is active, Side1 high when the second side of SPIM is active
  - code 3 for single laser (Side0) automatically turned on during a FAST_CIRCLES move
  - codes 4-7 are reserved for future use
- Bits 3-7 are reserved for future use and currently cannot be set

<html>
</html>

Side0_state (**R**): can be set to 1 or 0 as shorthand for turning on/off the Side0 laser without affecting the state of the Side1 laser. It is equivalent to querying the logical laser output state (X), changing the LSB, and then setting the output state (X). Introduced in v3.11.

Side1_state (**T**): can be set to 1 or 0 as shorthand for turning on/off the Side1 laser without affecting the state of the Side0 laser. It is equivalent to querying the logical laser output state (X), changing the 2nd bit, and then setting the output state (X). Introduced in v3.11.

On MS2000 or RM2000

Format	LED X=[1 to 100] Y=[0 or 1] Z=[0 or 1] F=[0 or 1]
Type	Percentage between 0 and 100
Remembered	Using SS Z
Firmware Required	LED DIMMER

X argument sets the brightness of ASIs LED illuminator by generating PWM through TTL out. TTL out mode should be set to ‘9’ (i.e. TTL y=9). Enable out from the LED illuminator should be connected to TTL out on controller. This setting can be saved in non-volatile memory using the

SAVESET command.

Note: If you are encountering flickering in a live image,
try adjusting your shutter speed to avoid aliasing with the
LED PWM frequency. The PWM frequency is 1 KHz.

Y, Z, and F arguments provide on/off control for additional LED lamp connectors on some controllers. Not PWM dimmable.

On MS2000 with Dual LED

Format	LED X=[0 to 100] Y=[0 or 100] R=[0 or 100] T=[0 or 100]
Type	Percentage between 0 and 100
Remembered	Using SS Z
Firmware Required	DUAL_LED
Default Values	X=20 Y=20 R=100 T=100

Dual LED is a modern two LED driver for MS2000. Instead of using PWM to dim the LED, DUAL LED varies the current applied to dim the LEDs (DC constant current driver) resulting in very little flicker even at high shutter speeds. The brightness of the two LEDs can be independently set using the X and Y arguments of the LED command. At 100% brightness about 900ma is applied to the connected LED. The DUAL LED board can supply up to 900mA to two LEDs simultaneously, with both channels independently controllable.

The DUAL LED command also has a current limiting feature, where the user can set the maximum allowed brightness of the two LEDs with R and T arguments. This setting is saved in a non volatile memory on the PCB , so this setting is preserved even after firmware upgrade. R and T are both defined as the upper-limit that X and Y can be set to. R corresponds to X and T corresponds to Y.

For example, an LED with maximum rated current of 100ma is attached to channel 1. Then setting LED R=10 will limit the maximum applied current to 90ma by limiting X to no greater than 10.

X sets the brightness for LED connected to channel 1,
Y sets the brightness for LED connected to channel 2,
R sets the maximum brightness for LED connected to channel 1, and
T sets the maximum brightness for LED connected to channel 2.

Example

```
LED X=10 Y=50
:A
```

Sets the Brightness of LED connected to Channel #1 to be 10% , Channel #2 to be 50% .

```
LED X? Y?
X=10 Y=50 :A
```

Queries the card for Brightness of LEDs connected to Channel #1,and #2.

```
LED R=10
:A
LED X=50
:A
LED X?
X=10 :A
```

User sets the maximum brightness of LED#1 to 10%. If the user tries to increase the brightness beyond 10%, its overwritten by maximum brightness settings and limited to 10%.

Command:LLADDR (LL)

Shortcut	LL
Format	LLADDR X=xaddr Y=yaddr Z=zaddr LLADDR X? Y? Z?
Remembered	Using SS Z

Sets the address of the axis used by the low level command set. The default values are X=24, Y=25, and Z=26. Some systems require X=1, Y=2, and Z=3. This setting can be saved in non-volatile memory using the SAVESET command.

Command:LOAD (LD)

MS2000 or RM2000 syntax

Shortcut	LD
Format	LOAD [Axis]=### …
Units	Position in 1/10 microns
Remembered	Not saved
Firmware Module	RING BUFFER

Tiger syntax

Shortcut	LD
Format	LOAD [Axis]=### …
Units	Position in 1/10 microns
Type	Axis-Specific
Remembered	Not saved
Firmware Module	RING BUFFER

The LOAD function places a set of position coordinates in the next available internal ring-buffer memory location. The position values are expressed as floating point numbers representing tenths of a micron, the same as the MOVE command. If a + is specified instead of =###, then the current

position of the axis is stored in the ring buffer (as of Tiger firmware v2.81 and MS2000 firmware v9.2g). For example, the command `LOAD X+ Y+ Z=0.1` would store the current position of the X and Y axes and the Z position of 10nm to the ring buffer. The ring buffer contains `50` positions by default; contact ASI for the option of having `250` positions in the ring buffer (but this entails certain tradeoffs).

The coordinates for the next move may be queried by using the command `LD X? Y? Z?`. Setting the current buffer position and initiating moves to locations stored in the buffer can be done using the RBMODE command (see below), or by using a front panel button. The `LOAD` operation increments the number-of-positions counter accessed using `RM X?` (see the RBMODE command). In TG-1000 the ring-buffer is stored and executed on a per-card basis. If positions for one or more axes on one card are specified but others are not, the position of the unspecified axes during the ring buffer execution will not be well-defined. To clear the buffer, type `RM X=0`.

The current stage position (for all axes with `RING_BUFFER` firmware) may be loaded into the ring-buffer by pressing the Joystick button for 3 seconds and releasing.

As of `Tiger 3.41` and `MS2000 9.2o+` an error code is returned when the ring buffer is full, the old behavior was to always return `:A` even when no positions are open.

Expected Response:
:N-5 → position not loaded
:A → position loaded

> **CAUTION:** If you are using TTL mode 12 (see the TTL command), the values entered into the ring buffer using the LOAD command represent RELATIVE coordinates, not ABSOLUTE coordinates. You must drive the stage to the appropriate starting position before triggering any ring buffer sequence.

Command:LOCK (LK)

This command has slightly different usage for `CRISP`, `Phototrack`, and `SERVOLOCK_TTL`, and very different use for `TGPMT` card.

CRISP usage

Tiger Syntax

Shortcut	LK
Format	[Addr#]LOCK [X] [Y] [Z=lock_offset] [F=code] [M=logAmp_cal] [T=sum]
Type	Card-Addressed
Required Firmware Module	CRISP
Remembered	Using [Addr#]SS Z

MS2000 and RM2000 Syntax

Shortcut	LK
Format	LOCK [X] [Y] [Z=lock_offset] [F=code] [M=logAmp_cal] [T=sum]
Required Firmware Module	CRISP

Remembered	Using SS Z

The LOCK command without any arguments advances to the next system state just as would a short-press of the @ button.

X [crisp_state]: LK X? returns the single character indicating the current CRISP system state as described in the table CRISP System States. For historical reasons, do not use LK X to set the current state, instead use LK F.

Y [error_number]: LK Y? returns the current value of the focus error which is also shown on the LCD display. As of Tiger 3.39 and MS2000 9.2n this command returns the exact value on the LCD, previously it didn't account for the system state and only returned the relative focus error.

Z [lock_offset]: LK Z? returns the current value of the focus error lock_offset. The offset is automatically determined during calibration and is modified when the command wheel on the controller is used to focus a locked system. The offset is also reset with a >10 sec. press of the @ button. A particular value of lock_offset may be set using LK Z=lock_offset.

F [crisp_state]: LK F=code will unconditionally set the focus state. Code is the ASCII decimal equivalent for the 'state' character that is displayed on the LCD. For example, to unconditionally enter the B state the command would be LK F=66. Not all states are best entered directly. See the CRISP System States table for the appropriate ASCII code to enter a particular state gracefully.

M [logAmp_cal]: LK M? will query the value set by the logAmp calibration routine (entered using LK F=72). You can use LK M=# to set it manually, which is only advised if you have previously calibrated and know the correct value. See Saving Calibration and Offsets for more details. Available on Tiger v3.39 and MS2000 9.2n firmware.

T [sum]: LK T? returns the current CRISP sum value which is also shown on the LCD display. Available on Tiger v3.40 and MS2000 9.2o firmware.

Note: The results of LK Y? and LK T? can change depending on the system state, more information can be found in the LCD Display section of the CRISP manual. For the most part you don't have to worry about it, as the results only change in the diagnostic states A, B, and M.

Example:

```
LK X?
:A R
```

Shows that CRISP is in the READY state.

SERVOLOCK_TTL usage

Tiger Syntax

Shortcut	LK
Format	[Addr#]LOCK [X] [F=code]
Type	Card-Addressed

Remembered	Using [Addr#]SS Z

The LOCK command without any arguments toggles the SERVOLOCK_TTL function from active to inactive. As short-press of the @ button will also do unless the firmware build also has CRISP, in which case CRISP takes priority. See full documentation of SERVOLOCK_TTL firmware module.

LK X? returns the single character indicating the current state, which for SERVOLOCK_TTL is the letter T for enabled and Z for disabled. If CRISP is also present in the firmware module then those states will also appear. LK F=code will unconditionally set the focus state. Use LK F=84 (ASCII letter T) to enable SERVOLOCK_TTL control and LK F=90 (ASCII letter Z) to disable it when done

TGPMT usage

Shortcut	LK
Format	[Addr#]LOCK [X] [Y] or [Addr#]LOCK [X?] [Y?]
Type	Card-Addressed
Remembered	Using [Addr#]SS Z

This command has a different function on a TGPMT card. Here its used to check the status of PMT (overloaded or not). Then if it is overloaded, issue a reset pulse to clear the overloaded state. The duration of the reset pulse is set with the RT Y command

[addr#]LK X?: Queries the **PMT0** status.

[addr#]LK Y?: Queries the **PMT1** status.

Code	Status
0	Overloaded
1	Ok

[addr#]LK X: Issue a reset pulse to **PMT0**.

[addr#]LK Y: Issue a reset pulse to **PMT1**.

Alternately, the status of the PMTs is also indicated by the LEDs on the TGPMT card (Green is ok, Red is overloaded). And the reset button can be pressed to clear the overload state.

Example

```
7LK X?
:A 0
```

Query the status of **PMT0** at card address 7. The 0 indicates that **PMT0** is overloaded.

```
7LK X
:A
```

Issue a reset pulse to **PMT0** at card address 7, which clears the overloaded state.

```
7LK X?
:A 1
```

Query the status of **PMT0** at card address 7. The 1 indicates that **PMT0** is NOT overloaded. Status is now **ok**.

On Phototrack systems

Shortcut	LK
Format	LOCK [X] [Y] [Z=sum_min] [F=quad_order]
Remembered	Using SS Z

LK with no argument performs same action as “@” short press.

LK X performs same action as “@” long press.

LK Y performs same action as “HOME” very long press.

Use *sum_min* to set the minimum sum-signal level required for tracking the sample. If the sum signal is less than *sum_min*, tracking will PAUSE.

The *quad_order* is the relative orientation of the PMT assembly and is normally set during calibration.

Command:LOCKRG (LR)

This commands function changes if the system has a Phototrack, CRISP, or SERVOLOCK_TTL modules.

On CRISP systems

Tiger Syntax

Shortcut	LR
Format	[Addr#]LOCKRG [X=cal_gain] [Y=objective_na] [Z=lock_range] [F=cal_range] [T=loop_gain]
Type	Card-Addressed
Remembered	Using [Addr#]SS Z

MS2000 and RM2000 Syntax

Shortcut	LR
Format	LOCKRG [X=cal_gain] [Y=objective_na] [Z=lock_range] [F=cal_range] [T=loop_gain]
Remembered	Using SS Z

The LOCKRG command allows the user to control of several system variables.

X `[cal_gain]`: The X parameter, `cal_gain`, is the gain variable normally obtained from running the calibration sequence. Although not recommended, it can be changed with this command, but it will be reset upon running the calibration sequence.

Y `[objective_na]`: The Y parameter sets both the `cal_range` focus depth (LR F) and also the `in_focus_mm range` (AFLIM Z) appropriately for the specified numerical aperture of the objective. The computed values can be read and/or overridden using the LR F and AFLIM Z commands respectively. This is a floating point number and can have up to six decimals of precision, although the math may truncate this precision internally.

Z `[lock_range]`: The Z parameter controls the maximum excursion (in either direction) of the stage from the position where the Lock state was initiated before the system generates an error condition and unlocks. The value `lock_range` is in units of millimeters. The default value is 1.0 mm.

F `[cal_range]`: The F parameter controls the excursion of the stage in the dither state of the calibration sequence. The default value for `cal_range` is 0.005 mm. Setting the objective's NA using LR Y will change this value.

T `[loop_gain]`: The T parameter controls the gain multiplier or loop gain. The default value is 4.

Note: Firmware with a compile date prior to November 2016 used the KADC command to the set loop gain. Firmware builds from November 2016 to March 2018 have both KADC and LR T commands which have an identical effect. Note: with LR T the axis character does not need to be specified.

With SERVOLOCK_TTL

Tiger Syntax

Shortcut	LR
Format	[Addr#]LOCKRG [Z=lock_range]
Type	Card-Addressed
Remembered	Using [Addr#]SS Z

The SERVOLOCK_TTL module uses the LOCKRG Z command to set the maximum excursion. If CRISP is also present then the same setting is shared by both modules.

The Z parameter controls the maximum excursion of the stage from the position where it was initially locked before the system generates an error condition and unlocks. The value `lock_range` is in units of millimeters. The default value is 1.0 mm.

On Phototrack system

Shortcut	LR
Format	LOCKRG [X=cal_value] [Y=xy_lock_range] [Z=z_ lock_range] [F=cal_range]
Remembered	Using SS Z

This command sets range limits for tracking and autofocus systems. For XY tracking systems,

the excursion from the point of lock for both the X and Y axes in millimeters is set with the lock_range value using the Y parameter. If the system encounters a lock_range or focus_range limit, servo tracking is terminated.

Cal_range is the distance in millimeters of the stage movement for automatic calibration of the Tracking or Focus system, set using the F parameter. The result of such a calibration is the cal_value, which can be set explicitly with the X parameter or queried using LR X?. The tracking parameters can be displayed on the serial terminal using LR Z.

Query: LR X? Y? F? returns the current value of the parameters.

Command:LOCKSET (LS)

Shortcut	LS
Format	LS Z=[focus_trim]
Required Module	AF-DUAL system

The command directly sets the focus_trim value normally adjusted with the control knob after locking.

:A is returned upon receipt of the command.

Example

```
LS Z?
:A Z=-48
```

returns the current reference value.

Command:MAINTAIN (MA)

The Maintain command has a different function in case of a piezo actuator then a motorized actuator

MS2000 or RM2000 syntax

Shortcut	MA
Format	MAINTAIN [Axis] = [0 to 5]…
Units	Integer code, see table below
Remembered	Using SS Z

Tiger syntax

Shortcut	MA
Format	MAINTAIN [Axis] = [0 to 5]…
Units	Integer code, see table below

Type	Axis-Specific
Remembered	Using [addr#]SS Z

Function for Motorized Actuator (xy stage, z drive etc)

The maintain command specifies the behavior of the controller after move completion. Move commands complete when the stage moves to within the finish error tolerance of the target position (''PCROS'' or ''PC'' command). Another relevant setting is the drift error (''ERROR'' or ''E'' command). The actions for various code values are:

Code	Description
0	[default] Post-move, when the controller detects drift from target specified by the drift error value, it will return the stage axis to the target several times (18) within a timeout period (~0.5 sec.) before declaring a move error code 60 and giving up further attempts.
1	Post-move, the controller will indefinitely continue to try to reach target when drifts greater than the drift error are detected. With codes 0 and 1, the motor drivers are turned off when the stage reaches the finish error tolerance.
2	The motor drivers remain on and the servo loop remains active. NB: making a manual move (e.g. joystick) may turn the motors off.
3	Drivers remain on and servos active for the post-move time set by the ''WAIT'' or ''WT'' command. The system BUSY is released when the finish error tolerance is first achieved. Setting the WAIT time sufficiently long can stabilize post-move drifts during data recording, but then allow for less power consumption of the driver amplifiers when waiting between moves.
4	Reserved
5	Servos Disengage. For example with motorized turrets this will allow the user to manually move the turret.

If there are no errors, the positive reply :A will be sent back from the controller.

Function for Piezo Actuator

This feature is only available on Tiger systems.

This command is “recycled” for a different use in piezo axes than for motor axes. For ADEPT piezo cards sets the maintain code. Currently 2 modes are implemented with the following codes:

MA [axis] =	Mode
0	default
1	Overshoot algorithm

Mode 0 is the default where the piezo DAC is set and the piezo drive electronics apply a voltage to the piezo to move the piezo to the correct position as measured by the strain gauge.

Mode 1 is the overshoot algorithm which may reduce the setting time in many circumstances where speed is critical and the user is willing to do some tuning. The piezo DAC is set as if the move were traveling past the actual target according to an overshoot percentage set by the PZ T setting. The idea is to slew more quickly initially. When an exit condition is reached the piezo DAC is set to the desired final position. There are two exit conditions, meeting either one or the other is sufficient:

(1) the strain gauge indicates that the piezo is at least halfway to the final position or
(2) the maximum time for the overshoot to be applied set by the PZ R is reached.

Note: At one point this behavior was controlled using the PM command. It was shifted over to MA starting in v3.06 but not in its current form until v3.11. Using this anything besides the default setting with firmware between v3.06 and v3.10 is not recommended.

Command:MOTCTRL (MC)

MS2000 or RM2000 syntax

Shortcut	MC
Format	MOTCTRL [Axis]±

Tiger syntax

Shortcut	MC
Format	MOTCTRL [Axis]±
Type	Axis-Specific

This command enables + or disables - the controller's ability to control the motor of a certain axis. The motor control voltage is set to zero and the position feedback control is not monitored when the motor is in disabled - mode. The electronics of the controller will attempt to keep the motor from moving while disabled, however, it should be noted that this is an open-loop brake control only, and any movement or drift is not corrected.

When queried with `MC <axis>?`, the controller returns values of `1` or `0` representing enabled and disabled respectively. The `MS2000` controller may also return a value of 2 if the clutch is disengaged, there is a switch on the front of the controller to toggle the clutch state.

If there are no errors, the positive reply :A will be sent back from the controller.

Example

```
MC X+ Y+ Z-
:A
```

This example shows that the X and Y motor control is enabled, but disables the Z motor control.

Command:MOVE (M)

MS2000 or RM2000 syntax

Shortcut	M
Format	MOVE [Axis]=[units 1/10 microns]...
Units	1/10 microns

Tiger syntax

Shortcut	M
Format	MOVE [Axis]=[units 1/10 microns]...
Units	1/10 microns
Type	Axis-Specific

Move one or more axis motors to an absolute position. Uses the scaling of the UM command, i.e. usually 10ths of microns for stages. If no position is specified, 0 (the origin) is assumed.

For devices with `CLOCKED POSITIONS` (e.g. turrets and filter sliders), the position is an integer value between one and the number of positions. Note that ASI filter wheels have a separate command set described in the filter wheel documentation.

A positive reply of :A is sent back when the command is received correctly. Reception of the reply does not mean the end of execution, and the STATUS (/) command can be used to determine if the move has been completed.

Examples

Send a command to move to a position:

```
M X=1234 Y=4321
:A
```

The controller will move the X-axis to position 123.4 microns from the origin using the maximum set speed (see the SPEED command). Simultaneously, it will move the Y-axis to position 432.1 microns.

Send a command to move to the origin:

```
M X Y Z
:A
```

The controller will move the X, Y, and Z axes to the origin. Zero is the default when no position is specified.

During this movement, the Joystick and Encoder inputs will be locked-out and cannot alter the target positions entered. The motors will stop when they have reached their target or when their limit switch is encountered. To stop the motors during a `MOVE` command, use the HALT (\) command.

Note: For Rotary and Theta stages the unit multiplier is in thousandths of a degree, set with the UM command.

- Command:MOVE (M)
- Command:MOVREL (R)
- Command:SPIN (@)
- Command:VECTOR (VE)

Command:MOVREL (R)

MS2000 or RM2000 syntax

Shortcut	R
Format	MOVREL [Axis]= [units 1/10 microns]...
Units	1/10 microns

Tiger syntax

Shortcut	R
Format	MOVREL [Axis]= [units 1/10 microns]...
Units	1/10 microns
Type	Axis-Specific
Remembered	Using [addr#]SS Z

Move one or more axis motor a distance relative from its current target position. This command is similar to the MOVE command except the new target position is calculated based on the current target position instead of being specified directly. Like the MOVE command, the typical unit of distance is tenths of microns.

The change to the target position is quantized by encoder counts. For example, with 16 TPI and rotary encoders there are 181590.4 encoder counts per millimeter. If you request 1.000 um move, the encoder target will change by 182 encoder counts which is 1.0022 um. By repeating the same relative move 600 times, the total move will be 600*182 = 109200 encoder counts which is 601.3 um, not 600.0 um. However, if you request for 2.000 um moves then the target will move by 363 encoder counts which happens to be closer to 2.000 um: repeated 300 times gives 599.7 um move in total. The reason for this behavior is that the stage and controller don't measure in microns, they can only tell how many encoder counts have gone by.

If the previous move was commanded by serial or TTL, then the post-move target position is based on the pre-move target position – where the previous move would ideally have landed – not on the pre-move actual position. This behavior prevents the possibility of accumulating small positioning errors when making sequential relative moves. Note that events such as manual moves (joystick/wheel), halted moves (by user or via motor error conditions), and automated drift correction moves will change the target position to the actual position.

A positive reply of :A is sent back when the command is received correctly. Reception of the reply does not mean the end of execution, and the command STATUS can be used to determine if the move has been completed.

Example

```
R X=1234 Y=-321 Z
:A
```

The controller will move the X-axis an additional 123.4 microns in the positive direction at the maximum set speed (see SPEED). Simultaneously, the Y-axis will move 32.1 microns in the negative direction, while the Z-axis will not move at all.

During this movement, the Joystick and Encoder input will be locked-out and cannot alter the target positions entered. The motors will stop when they have reached their target, or if their limit switch is encountered. To stop the motors during a serial `MOVREL` command, use the `HALT` (`\`) command.

- Command:MOVE (M)
- Command:MOVREL (R)
- Command:SPIN (@)
- Command:VECTOR (VE)

Command:MTIME (MT)

MS2000 or RM2000 syntax

Shortcut	MT
Format	MT [axis] = [time in milliseconds]...
Units	Milliseconds

Tiger syntax

Shortcut	MT
Format	MT [Axis] = [time in milliseconds]...
Units	Milliseconds
Type	Axis-Specific

This command returns the settling time of the last move in milliseconds.

Example

```
MT X
:A 168 0
```

This example shows what is returned after sending the command after a small move.

Command:MULTIMV (MM)

MS2000 or RM2000 syntax

Shortcut	MM
Format	MULTIMV [X=radius] [Y= speed] [Z= width] [F=mode_byte]
Remembered	Using SS Z
Firmware Module Required	MULTIAXIS_FUNCTION

Tiger syntax

Shortcut	MM
Format	[addr#]MULTIMV [X=radius] [Y= speed] [Z= width] [F=mode_byte] [R?]
Type	Axis-Specific
Remembered	Using [addr#]SS Z
Firmware Module Required	MULTIAXIS_FUNCTION

The `MULTIMV` command allows several common multi-axis move patterns to be executed. Presently the patterns supported include `circles` and `spirals`. If users have other special requirements, they should contact ASI for assistance.

The command, without any arguments, initiates the multi-axis pattern move. Commanded and manual (joystick) moves are not allowed while a multi-axis move is occurring.

The patterns are initiated from the current stage position. The movement is parameterized in terms of the speed (feed rate) in mm/sec and pattern parameters. For `circles`, the radius in millimeters is the only required parameter. For `spirals` the width per spiral turn in millimeters is required as well as the maximum radius.

The `mode` is a bit-mapped character that determines the characteristics of the motion. The mode bits are used according to the following table.

Bit	Set	Clear
0	Lead-in Move Used	No Lead-in Move
1	Controlled acceleration along path, set by ACCEL command, to programmed speed.	No controlled acceleration
2	Move pattern repeated indefinitely	Only single cycle of move pattern executed
3	Reserved	
4	Reserved	
5	Reserved	
6	Motion pattern selector bits 6 & 7: 00 FAST_CIRCLES 01 Circle 10 Helix (not implemented) 11 Spiral	
7		

This above settings can be saved into non-volatile memory by issuing the SAVESET command.

Specifying an argument for the pseudoaxis R in decimal sets the state directly (see table below; the value is simply the decimal representation of the corresponding state character). Note that the firmware expects only certain states to be set by the user (marked as “OK to set” in the table); setting to a different state may yield unpredictable results. Querying the pseudoaxis R value returns the decimal associated with the current state (currently expressed as a float; discard anything after the decimal).

Multi-axis move states (MULTIAXIS_FUNCTION firmware)			
Char	**Dec**	**OK to set?**	**State**
I	73	No	Idle/disabled
S	83	Yes	Starts state machine
P	80	Yes	Stop (goes to idle state after cleanup)
L	76	No	Lead-in move
A	65	No	Accelerating
M	77	No	Main move
m	109	No	Back move (unused?)
F	70	No	Fast circle move
R	82	Yes	Restart move (fast circles only)

FAST_CIRCLES Module

In `FAST_CIRCLES` mode, a lookup table is generated internally so the circles can occur very fast assuming the hardware allows fast motion. Using this mode changes the behavior of some parameters. There is no way for the user to enable or disable the `FAST_CIRCLES` modifications; the firmware build either includes `FAST_CIRCLES` or not (tell by using the `BUILD X` command).

X parameter (radius) remains the same. Note that the units are millimeters (or degrees for micro-mirror).

Y parameter (speed) is now specified in circles per second. Valid values range from 2 to 1000 with a default of 100 (equivalently a 10 ms period). Most hardware cannot support speeds faster than a few hundred cycles per second.

Z parameter is now the asymmetry ratio. If set to 1.0 (the default) a perfect circle will be generated, if set to 2.0 then the Y axis will move twice as far as the X axis to form an ellipse with major axis twice that of the minor axis. At present there is no way to tilt the ellipse (e.g. phase) but this can be added if needed.

In `FAST_CIRCLES` mode the circle is repeated indefinitely regardless of Bit2 of the mode_byte.

In `FAST_CIRCLES` mode the circle is centered at the position whenever it was initiated. To change the offset of the circle, stop the multi-axis move if needed, move to the desired center, and initiate the move (again). (Commanded and manual (joystick) moves are not allowed during any multi-axis moves.)

Changes to settings during a fast circles move will not take effect until the fast circles move is re-initiated.

During a fast circles move the position reported by the `WHERE` command is the center of the circle, not the instantaneous position.

Circles

Lead-in move assumes start location is center of circle and moves out to \begin{equation}X → X + r\end{equation} before the circular motion is started.

Spirals

Spirals start at current location. Presently, no lead-in move is programmed. The spiral equation is \begin{equation}r = width × \frac{θ}{2π}\end{equation}. Motion continues to the maximum radius. If mode BIT2 is set, the motion then continues spiraling inward, and continues inward and outward until halted.

Example

```
3MM x=0.02 y=5 z=0.02 f=68
:A
```

This command sets up the parameters to do a circle pattern for axes on card with address 3 (for MS-2000 omit the initial character 3)

```
3MM x=0.02 y=2 z=0.002 f=196
:A
```

This command sets up the parameters to do a spiral pattern for axes on card with address 3 (for MS-2000 omit the initial character 3)

3MM Initiates the patterns (for MS-2000 omit the initial character 3)

3MM The second time disables the routine (for MS-2000 omit the initial character 3)

Command:OS

MS2000 or RM2000 syntax

Shortcut	OS
Format	OS [axis] = [distance]...
Units	Millimeters
Remembered	Using SS Z

Tiger syntax

Shortcut	OS
Format	OS [axis] = [distance]...
Units	Millimeters
Type	Axis-Specific

Remembered	Using [addr#]SS Z

This command sets (or displays) the amount of distance in millimeters to travel to absorb the backlash in the axis' gearing. Analogous to backlash, but will always overshoot the desired position by the set amount and then come back towards the move's origination, whereas backlash always approaches from the same direction. Backlash move, if any, occurs before the overshoot move. Default is 0, which turns the overshoot routines off. When queried will return the actual value instead of the user-set target value

Example:

```
OS X=.05 Y=0
:A
OS X?
:X=0.049981 A
```

The command in this example will make the controller overshoot any X moves by location 50 microns before moving to the final target, while the overshoot algorithm for the Y axis is disabled.

Note: Tiger firmware 3.54 and 3.55 used this command to change the single axis rise time, this functionality has been moved to the SAR command in version 3.60.

TGTLC Syntax (Tiger only)

This command will return the current temperature, in degrees Celsius, from any active tunable lenses connected to the Tiger Tunable Lens Card (TGTLC). If a lens is not connected to that axis, or there is a communication error with it, Error 201 will be added to the error buffer, and that axis' temperature reading will be set to the default value of 30.0C.

Example:

```
OS V? W?
:A V=22.875000 W=30.000000
OS V? W?
:A V=22.875000 W=30.000000
OS V?
:A V=22.875000
```

On a tunable lens card, writing values with OS will do nothing, as overshoot is not implemented for TGTLC.

Command:PCROS (PC)

Motorized Axis - Drift Error

MS2000 or RM2000 syntax

Shortcut	PC
Format	PCROS [Axis]= [units mm]...
Units	Millimeters
Remembered	Using SS Z

Tiger syntax

Shortcut	PC
Format	PCROS [Axis]= [units mm]...
Units	Millimeters
Type	Axis-Specific
Remembered	Using [addr#]SS Z

This command sets/displays the Finish Error setting, which controls when the motor algorithm routines will turn off. The setting controls the crossover position error (in millimeters) between the target and position at which the controller will stop attempting to move the stage closer to achieve the ideal position=target. This is value also determines the maximum error allowable before a move is considered complete. This value is by default set to the value of the smallest move step size according to the encoder resolution, but many applications do not require such tight landing tolerance.

Example setting

```
PC X=.00005 Y=.00002 Z=.00005
:A
```

Values equal to or less than zero are acknowledged by :A , but ignored.

The command in this example will make the controller consider a `MOVE` command complete when the difference between the target and the current position is 50 nm for X, 20 nm for Y, and 50 nm for Z.

Example querying

```
PC X? Y?
:A X=0.001000 Y=0.001000
```

This shows how to query the finish error for X and Y; they have both previously been set to 1um.

Warning! If the **PCROS** value is extremely small, moves may take an excessively long time to complete. If this happens either increase the value or else work on tuning the stage.

Warning! If you increase the value for **PCROS (PC)** then

also increase the value for drift error (E) so that the **E** value is larger than **PC**. Otherwise an landing might initially be considered complete but then afterwards lead to drift correction moves.

Tunable Lens

Shortcut	PC
Format	PCROS [Axis]= ###…
Units	Float
Type	Axis-Specific
Remembered	Automatically

On the Tunable Lens card this command gets and sets a different parameter. Tunable lens diopter changes with temperature, this change varies with current being applied to the lens. So we built a model equation to help us calculate this Diopter per Celsius change. PC command sets the constant in this model equation. More info here

Command:PEDAL (PD)

MS2000 or RM2000 syntax

Shortcut	PD
Format	PEDAL [X=distance in mm] [Y=integer rate constant] [Z=multiplier] [F=use_pedals] PEDAL X? Y? Z? F?
Remembered	Using SS Z
Hardware/Firmware Required	pedal or rocker switch, PEDALS firmware module

Tiger (motorized) syntax

Shortcut	PD
Format	[addr#]PEDAL [X=distance in mm] [Y=integer rate constant] [Z=multiplier] [F=use_pedals] [addr#]PEDAL X? Y? Z? F?
Type	Card-Addressed
Remembered	Using [addr#]SS Z
Hardware/Firmware Required	pedal or rocker switch, PEDALS firmware module

This command sets/displays the dual-pedal footswitch controls for controllers with this feature (requires appropriate hardware). Besides a foot pedal, the same functionality is used with a dual rocker switch commonly present with FTP systems with a pair of synchronized vertical stages.

The command is set up as follows:
X: Pedal Step Increment size, in millimeters.
Y: Rate when pedal is held down, as an integer proportional to a speed in millimeters per second,
Z: an integer multiplier used when the pedal controls a zoom axis.

F: 0 or 1 depending on whether pedals are enabled or not

On Tiger the F setting defaults to 0 (i.e. set to disabled) and is only present in version 3.45 and later. On MS2000 the F setting defaults to 1 and is present on firmware 9.52 and later.

Warning: When the pedals are not connected and the F parameter is set to 1, the FTP vertical stages will attempt to move on system power-up. This only applies to **Tiger** controllers.

Warning: User must ensure that the Rate given in this command is not greater than the maximum speed of the axis being controlled by the pedals. Entering an invalid value may result in unexpected errors and failures (e.g. motor disabling itself).

If there are no errors, a positive reply of :A followed by the startup sequence.

Example

```
PD X=0.02 Y=8 Z=5
:A
PD X? Y?
:A X=0.02000 Y=8.00000
```

Command:PG

Piezo

Shortcut	PG
Format	PG [axis]=[25 to 5101] (pre v2.84) PG [axis]=[1 to 255] (v2.84 and above)
Units	Integer
Type	Axis-Specific
Remembered	Automatically

The PG command is used to set the gain of the feedback stage. The setting is stored in non-volatile memory on the ADEPT board. This is one of the settings that is automatically picked during long auto calibration. Please refer the calibration section for its usage. It is an Axis Specific command. This setting is automatically saved in the non-volatile memory.

The settings set with this command can also be done with PZ commands. One does not have an advantage over another; usage is left to user preference.

Pre v2.83: a formula was used to convert 25-5101 to 8-bit 255. Due to rounding issues and such, we removed the formula so now user can enter the setting directly and have more

control.

Tunable Lens

Shortcut	PG
Format	PG [axis]=[1 to 255]
Units	Integer
Type	Axis-Specific
Remembered	Automatically

On the Tiger Tunable Lens card, PG is used to get and set a different parameter. Tunable lens diopter changes with temperature, this change varies with current being applied to the lens. So we built a model equation to help us calculate Diopter per Celsius change as a function of current. The PG command sets the coefficient in this model equation. See the Temperature Compensation section in the TGTLC manual.

Command:PM

This is a Tiger only command, that has different usage for different devices, normally related to setting the method of control.

Piezo

Shortcut	PM
Format	PM [axis]=[0 to 3,+,-]
Units	Integer code
Type	Axis-Specific
Remembered	Using [addr#]SS Z

PM command sets the ADEPT card in various modes, Open Loop, Closed loop, Internal Input and External Input. In MS-2000 this is set by the ''PZ Z'' command; in TG-1000 either PM or PZ Z can be used.

PM [axis] =	**Mode of Operation**
0	TG-1000 input, Closed Loop (default)
1	External input, Closed Loop
2	TG-1000 input, Open Loop
3	External input, Open Loop
PM [axis]+	Fast Mode
PM [axis]-	Slow Mode

In Open Loop mode, a set voltage is applied to the piezo and the feedback from strain gauge is ignored. Useful during system calibration.

In Closed Loop mode, the voltage applied to the piezo is adjusted according to the feedback coming from the strain gauges. This is the default mode of operation.

TG-1000 input, in this mode the TG-1000 controller generates the positioning input for the piezo top-plate. This is the default mode of operation.

In External input mode, the piezo top-plate is positioned according to 0 to 10V analog signal provided by the user. Every one volt change moves the piezo 1/10 the range. We recommend that frequency of the signal be kept less than 10Hz for long moves, to give the piezo top-plate sufficient time to settle and come to a complete stop.

PM [axis]+ : Requires v3.10+ firmware and Rev M5 or later ADEPT card. Switches in a faster more responsive piezo position controller. However it is less stable and prone to oscillation. Suitable for 150um piezos.

PM [axis]- : Requires v3.10+ firmware and Rev M5 or later ADEPT card. Switches in a slower but more stable piezo position controller. Ideal for 300um or 500um piezos and when using heavier payload or samples.

The modes will revert back to default state, i.e. TG-1000 input with Closed Loop when system is powered off. Use the `[#Addr]ss z` command to save your preference.

The settings set with this command can also be done with PZ commands. One does not have an advantage over another; usage is left to user preference.

Micro-mirror

Shortcut	PM
Format	PM [axis]=[0 or 1] ...
Units	Integer code
Type	Axis-Specific
Remembered	Using [addr#]SS Z
Firmware Required	v2.8+

This command is “recycled” for a different use in MicroMirror axes than for piezo. In the context of a MicroMirror axis this command is used to put the axis in internal or external mode.

1 is external input mode. Mirror is positioned based on analog input voltage. Default mode until v3.10, except for SPIM-enabled systems.

0 is internal input mode. Mirror can be positioned thru serial command or onboard routines. Default mode for SPIM-enabled systems and v3.10+.

Example

```
PM A=1 B=1
:A
```

Puts the axes in external input mode

```
PM A? B?
A=1 B=1 :A
```

Queries the mode of axes

Tunable Lens (TGTLC)

Shortcut	PM
Format	PM [axis]=[0 or 3] …
Units	Integer code
Type	Axis-Specific
Remembered	Using [addr#]SS Z
Firmware Required	v3.19+

This command is “recycled” for a different use in Tunable Lens axes than for piezo. In the context of a Tunable Lens axis this command is used to put the axis in internal or external mode, and also to enable or disable Temperature Compensation. Temperature compensation is only available when tunable lens is in TG-1000 input mode. When using external input(s), make certain that JP1 and/or JP2 have been changed. These jumpers determine whether the BNC connectors are used as TTL Output/Input or as analog inputs. With *Axis Mode 1* and *JP1:2-3 shorted*, the left BNC labeled **TTL OUT** becomes a 0-5v analog input. With *Axis Mode 3* and *JP2:2-3 shorted*, the right BNC labeled **TTL IN** becomes a 0-5v analog input.

PM [axis] =	Mode of Operation
0	TG-1000 input, Temperature Compensation disabled (default)
1	External input, Temperature Compensation disabled (Requires JP1: 2-3 shorted)
2	TG-1000 input, Temperature Compensation enabled
3	~~External input, Temperature Compensation disabled (Requires JP2: 2-3 shorted)~~

Note: Mode 3 not implemented as of Tiger 3.39 due to hardware limitations.

Example

```
PM R=1 S=1
:A
```

Puts the axes in external input mode

```
PM R? S?
R=1 S=1 :A
```

Queries the mode of axes

TGGALVO

Shortcut	PM
Format	PM [axis]=[0-7] …
Units	Integer code
Type	Axis-Specific
Remembered	Using [addr#]SS Z
Firmware Required	v3.2+

For TGGALVO card, the bits 0-2 of the specified code sets the output range (values 0-7 in decimal). Bits 3-7 are reserved for future use. **Controller reset or restart (after doing `[Addr#]SAVESET Z`) is needed for setting to take full effect.** Note that the internal axis

units remain from -4000 to +4000, but that range of internal units is mapped to the output range set using the PM command.

in case of **SIGNAL_DAC** or **DAC_XY** firmware, this operation is performed with Command:PR command instead.

Code (Decimal)	Code (Binary)	Output range
0	000	0V to 2.048V
1	001	0V to 4.096V
2	010	0V to 10.24V
3	011	not supported
4	100	-1.024V to 1.024V
5	101	-2.048V to 2.048V
6	110	-5.120V to 5.120V
7	111	-10.24V to 10.24V

Example

```
PM A=2 B=7
:A
```

Puts the output A in 0-10V mode and output B in +/- 10V mode.

```
PM A? B?
A=2 B=7 :A
```

Queries the mode of axes

Command:PR

This is a Tiger only command, that has different usage for MicroMirrors and Piezos.

MicroMirror

Shortcut	PR
Format	PR [axis]=[5 to 10] …
Units	Integer code
Type	Axis-Specific
Remembered	Automatically
Firmware Required	v2.83+

This command is “recycled” for a different use in MicroMirror axes than for piezo. In the context of a MicroMirror axis this command is used to set the MicroMirror travel range. Settings is automatically saved into non-voltatile memory, however controller needs a system RESET or RESTART for setting to take effect.

PR[Axis Name] =	MicroMirror Range in degrees
5	5
6	6
8 (default)	8
10	10

Example

```
PR  A=5
:A
```

Sets range of A axis as 5 degrees

```
PR  A?  B?
A=5  B=8  :A
```

Queries the range of axes

Piezo

Shortcut	PR
Format	PR [axis]=[0 to 8] …
Units	Integer code
Type	Axis-Specific
Remembered	Automatically

PR is used to set the piezo travel range. It is an Axis specific command. Setting is automatically saved in the non-volatile memory. Will need a system RESET or RESTART for setting to take effect.

PR [Axis Name] =	Piezo Range in microns
1	50
2	100
3	150
4	200
5	300
6	350
7	500
8	70

Tunable Lens

Shortcut	PR
Format	PR [axis]=[0 to 3] …
Units	Integer code
Type	Axis-Specific

Remembered	Automatically

PR is used to set the Tunable Lens units or user input. It is an Axis specific command. Setting is automatically saved in the non-volatile memory. Will need a system RESET or RESTART for setting to take effect. For more info refer to Units/Resolution section on TGTLC card page.

PR [Axis Name] =	**Units**
1 (default)	[0 to 290mA] with coordinates -32768 to +32768
2	[0 to 290mA] 1/1000 of dpt, range usually between 26000 to 7000
3	[-290mA to +290mA] with coordinates -32768 to +32768

SIGNAL_DAC for TGDAC4 / TGGALVO

Shortcut	PR
Format	PR [axis]=[0-7] ...
Units	Integer code
Type	Axis-Specific
Remembered	restart required (no SS Z required)
Firmware Required	v3.3+

For TGDAC4 card with SIGNAL_DAC firmware, the bits 0-2 of the specified code sets the output range (values 0-7 in decimal). Bits 3-7 are reserved for future use. **Controller reset or restart is needed for setting to take effect.**

For the SIGNAL_DAC firmware, the axis units are always in millivolts (0.001V), regardless of the PR setting. For example, when PR H=2, the maximum axis value of H is 10240. When PR H=0, then the maximum axis value of H is 2048.

Code (Decimal)	**Code (Binary)**	**Output Range**
0	000	0V to 2.048V
1	001	0V to 4.096V
2	010	0V to 10.24V
3	011	See Table Below
4	100	-1.024V to 1.024V
5	101	-2.048V to 2.048V
6	110	-5.12V to 5.12V
7	111	-10.24V to 10.24V

Setting the value with PR <axis>=3 selects a default value:

Firmware Version	**Code (Decimal)**	**Output Range**
Tiger >= v3.54	0	0V to 2.048V
Tiger < v3.54	2	0V to 10.24V

Example

```
PR A=2 B=7
:A
```

Puts the output A in 0-10V mode and output B in +/- 10V mode.

```
PR A? B?
:A A=2 B=7
```

Queries the mode of axes

Command:PSG

Piezo

Shortcut	PSG
Format	PSG [axis]=[1 to 255]
Units	Integer code
Type	Axis-Specific
Remembered	Automatically

PSG command argument sets the zero adjust potentiometer of the ADEPT card. Only values between 1 and 255 are accepted. The setting is stored in non-volatile memory on the ADEPT board. This is one of the settings that are automatically picked during both long and short auto calibration. Please refer the calibration section for its usage.

The settings set with this command can also be done with PZ commands. One does not have an advantage over another; usage is left to user preference.

Tunable Lens

Shortcut	PSG
Format	PSG [axis]=[1 to 255]
Units	Integer code
Type	Axis-Specific
Remembered	Automatically

On the Tunable Lens card, this command gets and sets a different parameter. Tunable lens diopter changes with temperature, this change varies with current being applied to the lens. So we built a model equation to help us calculate Diopter per Celsius change as a function of current. PSG command sets the reference temperature in this model equation. More info here

Command:PZ

MS2000 or RM2000 syntax

Format	PZ X=[1 to 255] Y=[25 to 5101] Z=[0 to 3] (pre 9.2f) PZ X=[1 to 255] Y=[1 to 255] Z=[0 to 3,+,-] F=[0 to 65000] (9.2f and above)
Units	Integer codes

Remembered	X and Y automatically, Z and F using SS Z

Tiger syntax

Format	[#Addr]PZ X=[1 to 255] Y=[25 to 5101] Z=[0 to 3] F=[0 to 100] T=[0 to 500] (pre v2.83) [#Addr]PZ X=[1 to 255] Y=[1 to 255] Z=[0 to 3,+,-] (v3.11 and above: F=[0 to 65000] R=[0 to 100] T=[0 to 500]) (v2.83-3.10: F=[0 to 100] T=[0 to 500])
Units	Integer codes
Type	Card-Addressed
Remembered	Using [addr#]SS Z

The **X** argument sets the zero adjust potentiometer of the ADEPT card. Only values between 1 and 255 are accepted. The setting is stored in non-volatile memory on the ADEPT board. This is one of the settings that are automatically picked during both long and short auto calibration. Please refer the calibration section for its usage. On Tiger controller PSG command is equivalent. One does not have an advantage over another; usage is left to user preference.

The **Y** argument sets the gain of the feedback stage. The setting is stored in non-volatile memory on the ADEPT board. This is one of the settings that is automatically picked during long auto calibration. Please refer the calibration section for its usage. On Tiger PG command is equivalent. One does not have an advantage over another; usage is left to user preference.

Pre MS2000 v9.2f & Tiger v2.83: For the Gain (Y) setting, a formula was used to convert the numerical range `[25 to 5101]` to 8-bit `[255 to 1]` and back again. Due to rounding issues and such, we removed the formula so now user can enter the setting directly as [0 to 255] and have more control.

The **Z** argument sets the board in various modes. On Tiger controller PM command is equivalent in firmware v2.8+. One does not have an advantage over another; usage is left to user preference.

PZ Z =	**Mode of Operation**
0	Controller controlled, Closed loop (default)
1	External input, Closed Loop
2	Controller controlled, Open loop (rare)
3	External input, Open loop (rare)
PZ Z+	Fast Mode
PZ Z-	Slow Mode

The **F** argument (requires Tiger v3.11+ and MS2000 v9.2f) sets the value of the timer for Auto Sleep feature. Units of are in minutes. To maximize piezo actuators' lifetime they should to be turned off when not in use. Every time the piezo is moved (e.g. commanded move, TTL-triggered move, or with a manual input device like the wheel) the auto sleep timer is reset to 0. When the timer reaches the value set by the **F** argument the sleep state is entered. In the sleep state piezos are moved to the sleep position and the code returned by the RS+ command (equivalent to the right status character on MS-2000 LCD screens) changes to **E**. However, the position returned by the WHERE command is not changed during sleep. Further, any move will proceed from the pre-sleep position. To disable the auto sleep feature, set the **F** argument to 0. On most firmware builds the default value is 0, i.e. disabled. However on SPIM builds the default value is 5 minutes. To exit sleep without affecting anything else, send the R <axis> command to execute a relative move of distance 0. Setting the **F** argument clears the timer but does not exit the sleep state.

Additional Tiger-only Functions

The **R** argument only applies when the piezo maintain code is set to 1. (In firmware between v2.83 and v3.10 it was the **F** argument instead.) It sets the maximum time to move towards the overshoot position, expressed in milliseconds. Refer to the documentation under MA.

The **T** argument only applies when the piezo maintain code is set to 1. It sets the overshoot amount, expressed as a percentage. For example, when set to 100 the piezo will begin the move as if the target position is twice as far away as it really is. Refer to the documentation under MA.

Command:PZC

MS2000 or RM2000 syntax

Format	PZC X=[0 or 1] Y=[0,1,2,3] Z=[1 to 100] F=[1 to 100] ,or PZC
Units	integer codes
Remembered	Using SS Z

Tiger syntax

Format	[addr#]PZC X=[0 or 1] Y=[0,1,2,3] Z=[1 to 100] F=[1 to 100] ,or [addr#]PZC
Units	integer codes
Type	Card-Addressed
Remembered	Using [addr#]SS Z

PZC when entered alone runs the auto calibration routine that sets various internal parameters for optimal operation of the piezo top-plate. :A is returned on completion, :N-5 is returned if the routine failed.

X argument sets the auto calibration type to perform. 0 is for short calibration (default) i.e. only strain gauges offset is adjusted. While 1 is long calibration routine, with adjusts both strain gauge offset and the feedback gain. You will need a length gauge to run the full calibration routine. Ss z command is not applicable, settings will revert back to default when controller restarts. Note: Long calibration is not implemented for ADEPT card with TG-1000. Usage will end in an error.

Y argument sets the axis index to which the length gauge is assigned. Default is 0 i.e. X index in a 4 axis build. Ss z command not applicable, settings will revert back to default on controller restart.

Z argument sets the delay between routine runs, default is 35 i.e. 35ms. Units are in milliseconds. Ss z command not applicable, settings will revert back to default on controller restart.

F argument sets the position where controller moves the piezo top-plate before adjusting the strain gauge offset. Accepts values between 1 to 100, units are %, default is 50 i.e. middle of the piezo range. Ss z command is applicable, settings will be saved between controller restarts.

Please use HALT command to stop a running calibration routine; else the routine will leave incorrect settings on the ADEPT card.

Command:PZINFO (PZI)

MS2000 or RM2000 syntax

Shortcut	PZI *requires v9.60*
Format	PZINFO

Tiger syntax

Shortcut	PZI *requires v3.61 (Tiger Comm)*
Format	[addr#]PZINFO
Type	Card-Addressed

`PZINFO` is a diagnostic command. ASI reserves the right to change the format of the `PZINFO` command at any point as more diagnostic features are found to be useful.

MicroMirror Example on Tiger

Micro Mirror is card address 3

```
3PZINFO
Hdwr REV.E
V0 :24.3 V
HV :143.5 V
V1 :63.7 V
V2 :63.2 V
V3 :63.2 V
V4 :64.9 V
V5 :64.3 V
V6 :65.4 V
I2C Check> DAC[OK] OSC1[OK] OSC2[OK] EEPROM[OK]
Mode> A[IN] B[IN] C[IN] D[IN]
```

Piezo Example on Tiger

Piezo is card address 1

```
1PZINFO
Voltages @ Pos1>
HV   : 147 V
Sout : 4 V
Pzout: 65 V
I2C Check> DAC[OK] SWITCH[OK] DigPot[OK]
ADEPT Rev 0
DigPot> Sgoffset: 110 Gain: 96
Closed Loop
TG1000 IN
HV ENABLE
FAST MODE
SG Offset [OK]
```

Piezo Example on MS2000

```
PZINFO
Voltages @ Pos1>
HV   : 147 V
Sout : 4 V
Pzout: 65 V
I2C Check> DAC[OK] SWITCH[OK] DigPot[OK]
ADEPT Rev 0
DigPot> Sgoffset: 110 Gain: 96
Closed Loop
TG1000 IN
HV ENABLE
FAST MODE
SG Offset [OK]
```

PMT example on TGPMT

TGPMT is card address 7

```
7PZI
Hdwr REV.0
V0 :24.0 V
V1 :15.0 V
Avg: 2
I2C FRAM: OK
PMT0> Gain:   0 , ADC:   13 , BG:    0 , Status: ENABLED
PMT1> Gain:   0 , ADC:   13 , BG:    0 , Status: ENABLED
<LF>
```

Command:RBMODE (RM)

MS2000 or RM2000 syntax

Shortcut	RM
Format	RBMODE [X=control] [Y=axis_byte] [Z=buffer_pointer] [F=mode_byte]
Remembered	Using SS Z
Firmware Module Required	RING BUFFER (and ARRAY MODULE from some RM F functions)

Tiger syntax

Shortcut	RM
Format	[addr#]RBMODE [X=control] [Y=axis_byte] [Z=buffer_pointer] [F=mode_byte]
Type	Card-Addressed

Remembered	Using [addr#]SS Z
Firmware Module Required	RING BUFFER (and ARRAY MODULE from some RM F functions)

Provides control of movement and save operations involving the controller's internal 50-position ring-buffer (optionally to 250 positions, contact ASI). The LOAD command or the joystick button are used to fill the ring buffer.

For ring-buffer moves, check the axis_byte parameter if you are having trouble moving an axis.
MS2000 firmware builds set the axis_byte to 3 as a default, so only the X and Y axes are enabled.
TG1000 firmware builds set the axis_byte to all axes present on the controller as the default.

The command, without any arguments, sets the TTL input interrupt flag and performs the same operation that a TTL IN0 input pulse would control as determined by the current `IN0_mode`. See TTL command.

A move to the Next Position may be initiated by:

- a TTL pulse when the appropriate IN0_mode is selected (See TTL command, `IN0_INT` Firmware Module Required).
- a short press and release of the @ button (as long as other special functions are not utilizing the @ button).
- by the RM command without arguments.

The argument variables are defined as follows:

X: control

0 – Clears the ring buffer (`RING_BUFFER` firmware required)
1 – Starts array scan (`ARRAY_MODULE` firmware required)

`RM X?` returns the number of **used** positions in the ring buffer (MS2000 v9.2g+ or Tiger v2.89+).

Special behavior in consume mode (`RM F=0`): `RM X?` returns the number of **empty** positions in the ring buffer. (MS2000 9.2p+ or Tiger v3.41+)

Y: axis_byte

1-31: The `axis_byte` is a decimal value that represents the underlying binary bit pattern of a byte. This value determines which axes are commanded to move, the same axis positions are reported using `TTL Y=5`. The ordering of axes is the order on the card/controller, with the first axis getting the LSB. The `axis_byte` setting also applies to the `SERVOLOCK_TTL` module and TTL-triggered moves. The default is 3.

You can determine the axis order by looking at the BU X command, which will respond with axis

information below the build name. This will be something like: "`Motor Axes: X Y Z F`" in a 4-axis build, which would mean the axis indices are X=0, Y=1, Z=2, F=3. You can verify the axis index with the `Z2B <axis>?` command.

The decimal value to use for the `axis_byte` is the sum of the binary digits corresponding to the desired axes, in the above case the first four axes are present so the value is 1+2+4+8 = 15. For example to enable all 4 axes you would send the command `RM Y=15`.

`::::fzyx` → which axes are in each bit position
`00001111` → the bit pattern needed to enable all axes (15 in decimal)
`MSB::LSB` → most significant bit - least significant bit

If you wanted to disable only the Z axis in a 4-axis build like this you would send the command `RM Y=11` to the controller (11 is `00001011` in binary = 1+2+8).

In MS2000 9.2o the default axis_byte behavior matched Tiger, enabling all axes present. 9.2p and future MS2000 builds maintain the legacy (<9.2o) default behavior of only implementing the X and Y axes for ring buffer moves (`RM Y=3`).

Z: read_index

Sets or reads the read index for the next move. The read index is zero-indexed, so its maximum value is the one less than the number of positions in the ring buffer.

Special behavior in consume mode (`RM F=0`): The read index is read-only. (MS2000 9.2p+ or Tiger v3.41+)

F: mode_byte

This mode selection specifies how the ring buffer should trigger moves, handle looping, and whether to remove points from the buffer after moves or not. The lowest three bits are used to specify the mode. Presently modes 0 through 4 (decimal) are supported:

MS-2000 v9.2p or Tiger v3.41 required
0 – Consume Mode: A TTL pulse (or `RM` command without arguments) moves to the next position in the ring buffer and deletes the position from the ring buffer. New positions can be loaded on the fly. This mode reduces the capacity of the ring buffer by 1. When entering or exiting consume mode the ring buffer is cleared and the read/write indices are reset to 0. Note that the behavior of `RM X` and `RM Z` are different when in consume mode. Prior to firmware version 9.2p or 3.41, this mode was not implemented (setting it would result behavior like Mode 1).

1 – TTL Triggered Mode: `(default)` A TTL pulse (or `RM` command without arguments) moves to the next position of the ring buffer. After reaching the end of the ring buffer, the index will wrap around to the beginning automatically.

2 – One-shot Autoplay Mode: A TTL pulse or `RM` or `AR` command without arguments plays the ring buffer from the current position to end, or an array from the beginning, with a delay between points set by RT Z (make sure delay is set appropriately; e.g. setting 1ms won't work with motorized stage). After the stage has reached the final position in the array, it will go back to the starting position of the

array, set by AHOME.

3 – Repeat Autoplay Mode: Upon a TTL pulse or RM or AR command without arguments, plays from current position, or an array from the beginning, continuously in a loop with delay set by RT Z (make sure delay is set appropriately; e.g. setting 1ms won't work with motorized stage). While running, another trigger causes autoplay to stop. Starting v3.24, this mode works on TGLED card too. When TTL X=21, TGLED cycles through all LED channels without waiting for a TTL trigger.

MS-2000 v9.52 or Tiger v3.45 required
4 – One-shot Autoplay Mode Without Return to Start Position: A TTL pulse or AR command without arguments plays the array from beginning to end with a delay between points set by RT Z. This mode does not go back to the first position of the array when finished, instead it stays at the last position of the array. Requires the ARRAY MODULE.

Bits 4-7 are unused.
MSB (Bit 8) – read-only, set to 1 (128 is added) if ring buffer is auto playing and 0 otherwise

On Tiger v2.81-2.88 these were on the X pseudoaxis instead of F

> **CAUTION:** If you are using TTL mode 12 (see the TTL command), the values entered into the ring buffer using the LOAD command represent RELATIVE coordinates, not ABSOLUTE coordinates. You must drive the stage to the appropriate starting position before triggering a ring buffer sequence.

Command:RDADC (RA)

MS2000 Syntax and Function

Shortcut	RA
Format	RDADC [X?] [Y?] [Z?] [F?] [T?] [M?]
Units	Integer
Remembered	Not Applicable

Returns the present values on the MS-2000's 4-channel ADC. The X and Y channels are used for the joystick. The Z and F channels may be used for special applications, for example Autofocus or ADC_LOCK and ADC_FOLLOW modes of controlling the stage. Special firmware is required for these applications.

X?: Returns the ADC reading of the joystick X axis.

Y?: Returns the ADC reading of the joystick Y axis.

Z?: If the system has Video Autofocus, the user can query the focus score with the Z parameter, for example RDADC Z?.

T? / M?: If the system has a temperature sensor, the user can query the temperature in 1/100 degrees Celsius with the T parameter ie RDADC T? If there are two temperature sensors present, one connected to channel-1 and the other connected to channel-2 of an ADEPT Hub (I2C breakout board), then the M parameter also becomes active, for example RDADC T? M? would answer with :A 2565 2389 meaning sensor-1 has read 25.65C and sensor-2 has read 23.89C.

Example

```
RA X Y
:A 128 128
```

Shows typical ADC values for a centered joystick.

Tiger and TGPMT Syntax and Function

Shortcut	RA
Format	[addr#]RDADC [X?] [Y?] [Z?] [F?] [T?]
Units	Integer
Type	Card-Addressed
Remembered	Not Applicable

On a TGPMT card in a Tiger Controller, this is a Read Only command. It reports PMT signal read through an ADC onboard the TGPMT card.

X?: Returns the ADC reading of PMT0

Y?: Returns the ADC reading of PMT1

Z?: Autofocus related, requires AUTOFOCUS firmware module.

T?: Temp sensor related, requires TEMP_SENSOR firmware module.

ADC Specification can be found here.

Example

If the TGPMT card address was **7**,

```
7RDADC X? Y?
:A 2 1
```

“2” is the ADC reading from PMT0, and “1” is the ADC reading from PMT1

```
7RA X? Y?
:A 2 1
```

Command:RDSBYTE (RB)

MS2000 or RM2000 syntax

Shortcut	RB
Format	RDSBYTE [axis] = [status_byte]...

Tiger syntax

Shortcut	RB
Format	RDSBYTE [axis] = [status_byte]...
Type	Axis-Specific

Requests the TG-1000 and MS-2000 to respond with the `Status Byte` (see definition below). Similar to RDSTAT but returns the raw byte.

Note: If you don't see the serial response, it may be because the reply is in raw bytes, see the Python script below for an example of how to parse the data. Or use the RDSTAT command without any modifier, which returns the same byte in decimal form.

Status Byte Format

`76543210` → bit position (`0` is `LSB`)
`00001010` → bit pattern for hex `0x0A`, decimal `10`
`MSB::LSB` → most significant bit - least significant bit

The number is one byte, which can be broken down into 8 bits that represent the following internal flags:

Bit 0	0 = No commanded move is in progress. 1 = A commanded move is in progress. This bit is synonymous with the STATUS command. If the bit is set, then STATUS returns B, otherwise STATUS returns N.
Bit 1	0 = The axis is disabled. 1 = The axis is enabled. Axes can be re-enabled using one of the following: High Level command `MC <axis>+`, cycles the clutch switch for the Z-axis, Low Level Start Motor command (hex 47), or a system reset.
Bit 2	0 = Motor is inactive (off) 1 = Motor is active (on).
Bit 3	0 = Joystick/Knob disabled 1 = Joystick/Knob enabled
Bit 4	0 = Motor not ramping 1 = Motor ramping
Bit 5	0 = Ramping down 1 = Ramping up
Bit 6	Upper Limit Switch: 0 = Open 1 = Closed
Bit 7	Lower Limit Switch: 0 = Open 1 = Closed

Reply

:<byte as hexadecimal> in the examples below

<0x3A><byte as hexadecimal><0x0D><0x0A> as raw bytes

The reply should be read as raw bytes, a common pattern for the `Status Byte` is `0x0A`, which is <LF> when interpreted as ASCII. There is a Python script at the bottom of this page as an example.

The total length of the reply will be the number of axes sent in the command plus 3.
For example RB X Y Z will reply with 6 bytes.

The response `:<0x0A><0x0A>` below is `[58, 10, 10, 13, 10]` in raw bytes.
`58 = ':', 13 = '\r', 10 = '\n'` are always a part of the response.

MS-2000 Example

```
RB X
:<0x8A>
RB X Y
:<0x8A><0x0A>
RB X Y Z
:<0x8A><0x0A><0x0A>
```

TG-1000 Example

```
1RB X Y
:<0x8A><0x0A>
```

The X-axis example value of `0x8A` means the following:
`Bit7: 1` - X Axis is at its lower limit
`Bit6: 0` - X Axis upper limit switch open
`Bit5: 0` - Ramping down, if ramping
`Bit4: 0` - Motor not ramping
`Bit3: 1` - Joystick/Knob is enabled
`Bit2: 0` - Motor power is off
`Bit1: 1` - X Axis is enabled
`Bit0: 0` - No commanded move is in progress

Note: Motor power can be on while a commanded move is not in progress and the stage appears not to be moving. This happens when the motor is either making a final adjustment to a commanded move or when it is applying a force to maintain the stage position.

Python Helper Script

Python Status Byte

```
# /// script
# dependencies = ["pyserial>=3.5"]
# ///
import serial
from enum import Flag, auto

class StatusByte(Flag):
    """
    The Status Byte returned by the RDSBYTE (RB) command.
    The value parameter should be an 8-bit int, 0-255.
    00000001 <- Bit 0 is 1, commanded move in progress.
    """
    COMMANDED_MOVE = auto()
    AXIS_ENABLED = auto()
    MOTOR_ACTIVE = auto()
    JS_KNOB_ENABLED = auto()
    MOTOR_RAMPING = auto()
    MOTOR_RAMPING_UP = auto()
    AT_UPPER_LIMIT = auto()
    AT_LOWER_LIMIT = auto()

def main() -> None:
    # use an empty string for MS2000 (card_address = "")
    card_address = "1"

    # which axes to query (for a single axis use: axes = ["X"])
    # axes_byte_len is the number of bytes that need to be read for
RDSBYTE
    axes = ["X", "Y"]
    axes_str = " ".join(axes)
    axes_byte_len = len(axes) + 3  # 3 bytes for ':', '\r', and '\n'

    with serial.Serial("COM5", 115200, timeout=1) as serial_port:
        # query the controller for the status byte of each axis
        command = f"{card_address}RB {axes_str}\r"
        serial_port.write(bytes(command, encoding="ascii"))
        response = serial_port.read(axes_byte_len)

        # report and check for errors
        print(f"Send: \"{command[:-1]}\"")
        print(f"Recv: \"{response}\" (interpreted as ASCII)")
        print(f"Number of bytes to read: {axes_byte_len}\n")
        if b"N" in response:
            print("Error in response...")
            return

        # view as bytes
        response_bytes = [byte for byte in response]
        print(f"{response_bytes = } (raw bytes)\n")

        # get the status byte for each axis and skip the first byte
```

```
(':')
        status_bytes = [response[i] for i in range(1, len(axes) + 1)]
        print(f"{status_bytes = } (decimal)")

        # create a dictionary that maps uppercase axis names to status
bytes
        status_bytes_dict = {axis.upper(): StatusByte(status_byte) for
(axis, status_byte) in zip(axes, status_bytes, strict=True)}
        print(f"{status_bytes_dict = }\n")

        # check the status of each axis
        for axis in axes:
            status_byte = status_bytes_dict.get(axis.upper())
            # check a single flag
            is_at_upper_limit = StatusByte.AT_UPPER_LIMIT in
status_byte
            # check multiple flags
            is_js_and_axis_enabled = StatusByte.JS_KNOB_ENABLED |
StatusByte.AXIS_ENABLED in status_byte
            # check if one flag is True and the other is False
            is_motor_on_and_not_cmd_move = StatusByte.MOTOR_ACTIVE in
status_byte and StatusByte.COMMANDED_MOVE not in status_byte
            print(f"{axis} Axis Status: {status_byte.value:08b}")  #
print the status_byte in binary
            print(f"{status_byte = }")
            print(f"{is_at_upper_limit = }")
            print(f"{is_js_and_axis_enabled = }")
            print(f"{is_motor_on_and_not_cmd_move = }\n")

if __name__ == "__main__":
    main()
```

Command:RDSTAT (RS)

MS2000 or RM2000 syntax

Shortcut	RS
Format	RDSTAT axis [axis] [axis]...

Tiger syntax

Shortcut	RS
Format	RDSTAT axis [axis] [axis]...
Type	Axis-Specific

Without any additional characters this is the same as RDSBYTE, except the value is returned in ASCII decimal format instead of as a raw byte. See RDSBYTE documentation for the meaning of the byte.

Beginning with Tiger v2.8+ and MS2000 v9.2e a qualifier can be added to the axis name to change the information reported.

With ?, a busy or not busy character is returned for that axis (N or B, just as in STATUS).
With -, the left status character displayed on MS-2000 LCD of the axis is returned, including U or L for upper and lower limits, f or s for fast or slow joystick mode just selected, D for motor disabled, or a space for no event to report.
With +, the right status character displayed on MS-2000 LCD is returned (with some additions), including M for move, B for commanded move (e.g. HOME), K for servo lock, S for spin move, A for single axis move, T for multi-axis move, P for pause, E for piezo sleep, or a space for no event to report.

Example

```
RS X
:A 138
RS X?
:A N
RS X-
:A s
RS X+
:A M
```

Command:RELOCK (RL)

Shortcut	RL
Format	RELOCK
Firmware Module Required	CRISP

Turns on the CRISP laser and initiates a LOCK state using previously saved reference values.

Reply

:A is returned upon receipt of the command.

Warning: This command no longer used and does nothing. This functionality was removed around MS-2000 v9.2j and Tiger v2.4 firmware.

Command:RESET (~)

Shortcut	~
Format	RESET

This command causes the controller to do a software reset. A software reset re-initializes all variables

back to their pre-assigned values and initializes all positions to 0. Saved settings and system flags are preserved across resets, but not saved positions. Therefore commands like HM require a power cycle instead of a reset. To re-initialize settings to default, use SS X before the reset (see documentation for the SS command; note that on Tiger SS is a card-addressed command).

Example

```
RESET
:A
```

Additional Notes about usage on Tiger

RESET is usually a '' Broadcast command'' but can be used as a `Card-Addressed Command` as well. When addressed to a specific card, it resets that card and then the Comm card (required to communicate with the reset card) without affecting other installed cards.

Command:RTIME (RT)

General Usage

On MS2000 and RM2000

Shortcut	RT
Format	RT [X=report_time] [Y=pulse_length in ms] [Z=delay_time in ms] [F=num_aves] [M]±
Remembered	Using SS Z

On Tiger

Shortcut	RT
Format	[Addr#]RT [X=report_time] [Y=pulse_length in ms] [Z=delay_time in ms] [F=num_aves] [T=finish_error_time in ms] [M]±
Type	Card-Addressed
Remembered	Using [Addr#]SS Z

X: The X argument sets the time interval between report events when using the TLL_REPORT_INT firmware module. The `report_time` value has an acceptable range from 20 to 32700 milliseconds. The default value is 200 ms.

Y: The Y argument sets the length of the TTL output pulse in milliseconds when using any OUT0_mode that triggers a TTL pulse. (The Y arguments command has a slightly different usage on a TGLED card. Refer to TGLED card user guide for more details.) Note that this delay is prematurely ended (and TTL state set LOW) if any move is initiated. For automatic array scanning with TTL outputs, also use the Z argument below, to make sure the array does not move on before the TTL timer is finished.

Z: The Z argument sets the post-move delay time in milliseconds for array moves (using the

ARRAY MODULE), and/or the delay between ring buffer moves when RM F is set to autoplay (mode 2, 3 or 4). Note that for ring buffer moves the delay time specifies the interval between attempted moves, whereas for arrays the delay specifies the time between arriving at the desired position and initiating movement to the next position. For ring buffer if the delay time is set to be 0 then the actual time between moves will be the axis loop time (generally 0.25 ms times the number of axes, e.g. 1 ms for a four axis card). For array moves, if `TTL Y=2 or 11` then this Z argument is normally set to be at least as long as as RT Y to achieve full-length TTL pulses. Note that this Z argument is distinct from the time set using the `WAIT` setting which introduces a user-set delay after landing at a position before the move is considered complete (affects both busy status and any TTL output pulse). **Important note for use with TTL Y=11 mode**: the timer that implements the RT Z setting starts counting when the XY stage lands, regardless of CRISP status.

F: The F argument is used with the CRISP firmware module. Set `num_aves`, the power-of-two exponent for the number of samples to be averaged (2^N = Number of Samples). The default value is 0, 1 sample, no averaging.

This feature performs a rolling average on the error correction signal (LK Y?), where the window size is the number of samples (2^N).

Table: Number of Samples

Number of Averages	
N	**Samples 2^N**
0	1
1	2
2	4
3	8
4	16
5	32
6	64
7	128
8	256

Tiger v3.34 required.
T: The T argument sets `finish_error_time`, which is the total amount of time that a motorized stage has to spend within the finish error of the target position at the end of a commanded move (PC setting) before the busy flag is cleared and the move is considered complete. Defaults to 3 ms (previously the setting didn't exist but its effective value was 0.5 ms).

MS-2000 v9.54 or Tiger v3.53 required.
M: The M argument enables serial position reporting. Sending the command RT M+ enables the reports. To disable the reports send the command RT M-.

On Tiger with Micro-mirror for SPIM

Shortcut	RT

Format	RT [Z=delay_time] [F=scan_duration] [R=laser_duration] [T=camera_duration]
Units	Milliseconds
Type	Card-Addressed
Remembered	Using SS Z
Firmware Required	MM_SPIM

Sets up timings used in the high-level operation of SPIM state machine coordinated by Micro-mirror card. They are specified in ms with 0.25 ms resolution. These commands augment, not replace, the other RTIME parameters applicable to all TG-1000 cards. For SPIM state machine triggered by TTL after arming, these values are usually “locked in” during the arming step (i.e. upon SN X=97).

Z: *delay_time* is the delay between ring buffer moves just as normal, however it serves an added function: it is also the delay between the receipt of the trigger and the start of the SPIM state machine operation, allowing a systematic delay to be added. Note that resolution is 1 ms for this setting.

F: *scan_duration* sets the duration of each beam scan during SPIM operation. Total beam scan time will be multiplied by the number of scans (NR X). Introduced in v3.14; in v3.13 and earlier the value for SAF <axis> was used instead. Cannot be less than 1 ms.

R: *laser_duration* sets the duration that the laser control output stays high. Cannot be less than 0.25 ms.

T: *camera_duration* sets the duration that the camera trigger output stays high. Cannot be less than 0.25 ms.

All units in milliseconds and are currently rounded to the nearest 0.25 ms

On Tiger with MicroMirror and Phototargeting

Shortcut	RT
Format	[Addr#]RTIME [Y=laser_duration] [Z=delay_time]
Units	Milliseconds
Type	Card-Addressed
Remembered	Using [Addr#]SS Z

Y: The Y parameter `laser_duration` sets the time that the laser is turned on in milliseconds, essentially the same as TTL pulse length as described in the main TG-1000 programming manual. The setting applies to both moves initiated by AIJ as well as to ring buffer moves. Normal moves using MOVE or MOVREL commands will not turn on the laser. Its value should be between 1 and 65000.

Z: The Z parameter `delay_time` is the delay between ring buffer moves just as normal. However if `delay_time` is less than (`laser_duration + settle_delay`) then the ring buffer behavior is unspecified. Its value should be between 1 and 16000.

On Tiger with TGLED

Shortcut	RT

Format	[Addr#]RT Y=[LED ON time on TTL trigger in ms]
Units	Time in millisec between 1 to 65000
Type	Card-Addressed
Remembered	Using [Addr#]SS Z

Y: The RT command's Y argument is “recycled” for a different purpose for the TGLED cards. Here it is used to set the duration the LEDs stay on after a TTL trigger.

Other behaviors and function of RT command have been left unchanged. Refer to the TG-1000 programming manual for more info.

On Tiger with TGPMT

Shortcut	RT
Format	[Addr#]RT Y=[PMT overload reset pulse duration]
Units	Time in millisec between 1 to 65000
Type	Card-Addressed
Remembered	Using [Addr#]SS Z

Y: The RT command's Y argument is “recycled” for a different purpose for the TGPMT cards. Here it is used to set the duration the Reset pulse to clear the PMT from Overload state. Overload reset pulse is generated when the LOCK command is issued.

Example

Assuming TGPMT card address is **7**

```
7RT Y=100
:A
```

```
7RT Y?
:A Y=100.000000
```

On Phototrack systems

Shortcut	RT
Format	RT [X=report_time]
Remembered	Using SS Z

Sets the time interval between report events when using TTL X=5 TTL triggered serial interface asynchronous reporting. The report_time value has an acceptable range from 20 to 32700 milliseconds. The default value is 200 ms.

To turn ON/OFF serial position logging first set the ttl_function to serial logging using TTL X=5. Then either RM command without any arguments, or a TTL pulse on the INPUT BNC will toggle the serial reporting function ON or OFF. To change the reporting time interval use RT X=report_time. Save any changes you wish to keep using SS Z.

With SERVOLOCK_TTL Function

Shortcut	RT
Format	RT [R= duration threshold]
Remembered	Using SS Z

Sets the trigger duration threshold for the SERVOLOCK_TTL functionality (pulses longer that the threshold are considered “long” = negative move and shorter are considered “short” = positive move. Restricted to units of 0.25 milliseconds. Defaults to 0.75 ms.

Command:RUNAWAY (RU)

MS2000 or RM2000 syntax

Shortcut	RU
Format	RUNAWAY [axis] = [distance]... (9.2m and later, earlier RU X=n)
Units	Millimeters
Remembered	Using SS Z

Tiger syntax

Shortcut	RU
Format	RUNAWAY [axis] = [distance]...
Units	Millimeters
Type	Axis-Specific
Remembered	Using [addr#]SS Z

This command sets the servo loop error limit before the motors will be disabled. The value n, is the distance in millimeters that the internal servo target and the actual position can differ before the motor is disabled. Default is 1 to 2 mm. If spurious disable conditions are encountered, increase this number. For more sensitive crash protection, decrease this number. Prior to MS-2000 version 9.2f and TG-1000 version 3.20 a single value applied to all axes (Tiger card-addressed) but afterwards it is axis-specific. Prior to MS-2000 version 9.2m and TG-1000 version 3.20 only integer values were allowed, but afterwards floating point numbers are allowed and reported.

Reply

A positive reply of :A is sent back when the command is received correctly.

MS2000 Example

```
RU  X=5
:A
```

Sets runaway sensitivity to 5mm on the X axis for 9.2m and later, sets the sensitivity on all axis for 9.2l and earlier.

Tiger Example

```
1RU  X=5
:A
```

Sets runaway sensitivity to 5mm on all axes in card #1 in v3.19 and earlier, would only set the X axis (assuming it's on card #1) on v3.20 and later.

Command:SAA

MS2000 or RM2000 syntax

Shortcut	SAA
Format	SAA [axis]=### ...
Units	Axis units
Remembered	Using SS Z
Firmware Module	SINGLEAXIS_FUNCTION

Tiger syntax

Shortcut	SAA
Format	SAA [axis]=### ...
Units	Axis units
Type	Axis-Specific
Remembered	Using [addr#]SS Z
Firmware Module	SINGLEAXIS_FUNCTION

This command sets the peak-to-peak amplitude of the pattern. Negative numbers will reverse the direction of the ramp pattern and make the first triangle sweep negative instead of positive.

Example

```
SAA A=1000
:A
```

Sets 1 degree as the total (peak-to-peak) amplitude for (MicroMirror) axis A.

Command:SAD

MS2000 or RM2000 syntax

Shortcut	SAD
Format	SAD [axis] = [delay] ...

Units	Milliseconds
Remembered	Using SS Z
Firmware Required	9.56
Firmware Module	SINGLEAXIS_FUNCTION

Tiger syntax

Shortcut	SAD
Format	SAD [axis] = [delay] ...
Units	Milliseconds
Type	Axis-Specific
Remembered	Using [addr#]SS Z
Firmware Required	3.60
Firmware Module	SINGLEAXIS_FUNCTION

This command sets the single axis delay in milliseconds.

The delay time is only used in the variable triangle waveform, see SAP.

The delay time is not included in the single axis period (SAF).

Command:SAF

MS2000 or RM2000 syntax

Shortcut	SAF
Format	SAF [axis]=### ...
Units	Milliseconds or clock edges
Remembered	Using SS Z
Firmware Module	SINGLEAXIS_FUNCTION

Tiger syntax

Shortcut	SAF
Format	SAF [axis]=### ...
Units	Milliseconds or clock edges
Type	Axis-Specific
Remembered	Using [addr#]SS Z
Firmware Module	SINGLEAXIS_FUNCTION

This command sets the period of the pattern, in units of milliseconds in case of internal clock (default, see SAP) or in number of clock edges for external clock. Note that the triangle pattern and square wave pattern will automatically force themselves to have a period of an even number of milliseconds, even if the user specifies a period of an odd number of milliseconds. When period is set to be 1msec, the resulting behavior is undefined.

Note: On Micro Mirror cards the actual waveform output is modified by the filter (tunable with BACKLASH), especially when the period is set to be less than 10 milliseconds.

Note: This command will limit the single axis rise time (SAR) to the single axis period minus one automatically.

Example

```
SAF A=10
:A
```

Sets up the period of the pattern at 10 milliseconds or 100Hz.

Command:SAM

MS2000 or RM2000 syntax

Shortcut	SAM
Format	SAM [axis]=### ...
Units	Integer code, 0-4 (see below)
Remembered	Using SS Z
Firmware Module	SINGLEAXIS_FUNCTION

Tiger syntax

Shortcut	SAM
Format	SAM [axis]=### ...
Units	Integer code, 0-4 (see below)
Type	Axis-Specific
Remembered	Using [addr#]SS Z
Firmware Module	SINGLEAXIS_FUNCTION

Sets the single-axis mode according to the integer code.

Note: For the TTL-triggered modes (2 and 4), the controller needs to be in the **TTL X=30** input mode.

Code	Meaning
0	Puts single-axis mode in idle state (i.e. stops it if running)
1	Puts the single-axis mode in active state (i.e. starts generating the pattern)
2	Arms the trigger; the routine only cycles once, then waits again for another TTL trigger. *Tiger 3.31+*
3	Makes the single-axis mode active and restarts the pattern of any other axis on the same card so they will be synchronized
4	Arms the trigger; the routine is free running after the TTL trigger. *Tiger 3.41+*

Note: On Tiger v3.29 and previous versions, mode 2 has the same behavior as mode 4.

Note: In modes 2 and 4, there is a delay of 0.25 to (`Servo Lp Time` + 0.25) milliseconds before the waveform starts after the initial TTL trigger. To check the `Servo Lp Time` use the INFO command.

Example

```
SAM A=0
:A
```

Disables the routine for the A axis

```
SAM A=1
:A
```

Enables the routine for the A axis

```
SAM B=2
:A
```

Arms the routine for the B axis. The routine for B will start running on receipt of a TTL pulse.

Note: In Tiger version 3.29 and prior the routine is free running after the TTL trigger. In version 3.31 and later, the routine only cycles once, then waits again for another TTL trigger. As of Tiger version 3.41, in mode 4 the routine is free running after the TTL trigger.

```
SAM B=3
:A
```

Enables the routine for the B axis. Also the routine for A axis is reset, so they will both run in sync

Command:SAO

MS2000 or RM2000 syntax

Shortcut	SAO
Format	SAO [axis]=### ...
Units	Axis units
Remembered	Using SS Z
Firmware Module	SINGLEAXIS_FUNCTION

Tiger syntax

Shortcut	SAO
Format	SAO [axis]=### ...
Units	Axis units
Type	Axis-Specific
Remembered	Using [addr#]SS Z
Firmware Module	SINGLEAXIS_FUNCTION

This command sets the position of the center position of the single-axis pattern. For example, if the offset is 1000 and the peak-to-peak amplitude is set to 1000, the pattern will go between positions 500 and 1500.

Note that manual moves (e.g. with joystick or wheels) while a single-axis pattern is being generated automatically adjust the single-axis offset value, such that this command may not be needed.

As of Tiger firmware v2.82, using the "+" operator instead of specifying a position will store the current position to the offset for the specified axis. For example, `SAO A+` set the position of axis A to the center position of the single-axis pattern

Example

```
SAO A=1000
:A
```

Sets offset of the offset of the pattern to be 1 degree for (MicroMirror) axis A.

Command:SAP

MS2000 or RM2000 syntax

Shortcut	SAP
Format	SAP [axis]=### ...
Units	Integer code, 0-255 (see below)
Remembered	Using SS Z
Firmware Module	SINGLEAXIS_FUNCTION

Tiger syntax

Shortcut	SAP
Format	SAP [axis]=### ...
Units	Integer code, 0-255 (see below)
Type	Axis-Specific
Remembered	Using [addr#]SS Z
Firmware Module	SINGLEAXIS_FUNCTION

This command sets the type of pattern to generate and configures the clocks. The parameter is a bit-mapped number that determines the characteristics of the motion, with the lowest bits determining the type of pattern. The code is interpreted according to the following table:

Bit	Clear	Set
7	Internal Trigger	External Trigger on Backplane TTL input
6	Polarity of Trigger: positive edge	Polarity of Trigger: negative edge
5	No TTL out	TTL out
4	Polarity of TTL out: active high	Polarity of TTL out: active low

Bit	Clear	Set
3	Reserved	Reserved
2-0	000 Ramp/Sawtooth Wave (code 0) 001 Triangle Wave (code 1) (period always even number of milliseconds) 010 Square Wave (code 2) (period always even number of milliseconds) 011 Sine Wave (code 3) 100 Variable Triangle Wave (code 4) Tiger v3.55 required 101 Reserved (code 5)	

The Variable Triangle Wave pattern uses the OS command to change the time in milliseconds it takes to reach to the peak of the waveform.

Serial command <Card Addr#>TTL Y=22 will route the TTL pulses generated when BIT5 is set, to the TTL OUT0 port. Available only in Tiger firmware v3.17 and above.

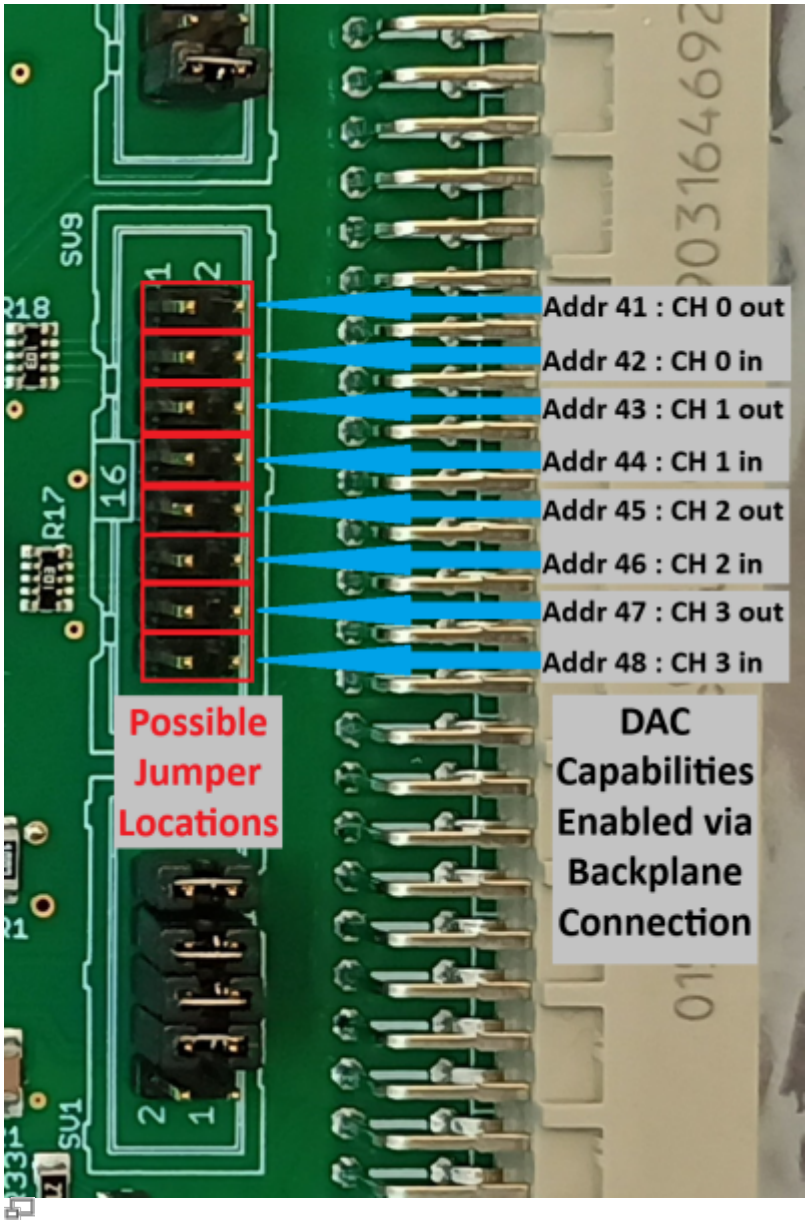

Jumper usage for TGDAC/TGGALVO direct backplane TTL IO

Jumpers can be placed on the TGDAC4 / TGGALVO card header labeled SV9 to enable backplane input and output triggering for the SAP command. The TTL inputs for external triggering will individually

trigger each axis as follows:

Triggered Axis	Backplane Trigger input address	Backplane TTL out address
0	42	41
1	44	43
2	46	45
3	48	47

Example

```
SAP R=0
:A
```

Sets up for ramp (sawtooth) pattern, running off internal clock with no TTL outs

```
SAP R=129
:A
```

Sets up for triangle pattern, running off positive edge external TTL clock with no TTL outs.

```
SAP R=161
:A
```

Sets up for triangle pattern, running off positive edge external TTL clock with TTL outs. A 250usec pulse is put out at the start of the pattern.

Command:SAR

MS2000 or RM2000 syntax

Shortcut	SAR
Format	SAR [axis] = [rise_time] ...
Units	Milliseconds
Remembered	Using SS Z
Firmware Required	9.56
Firmware Module	SINGLEAXIS_FUNCTION

Tiger syntax

Shortcut	SAR
Format	SAR [axis] = [rise_time] ...
Units	Milliseconds
Type	Axis-Specific
Remembered	Using [addr#]SS Z
Firmware Required	3.60
Firmware Module	SINGLEAXIS_FUNCTION

This command sets the single axis rise time in milliseconds.

The rise time is only used in the variable triangle waveform, see SAP.

The single axis rise time sets the peak location of the variable triangle waveform.

The single axis rise time has minimum value of 1 and maximum value of the single axis period - 1 (SAF).

Command:SAVEPOS (SP)

MS2000 or RM2000 syntax

Shortcut	SP
Format	SP [X=inhibit]
Units	0 or 1 only
Remembered	Using SS Z

Tiger syntax

Shortcut	SP
Format	[addr#]SP [X=inhibit]
Units	0 or 1 only
Type	Card-Addressed
Remembered	Using [addr#]SS Z

The axis positions and soft limit locations are usually automatically saved when power is turned off. If this action is not desired, setting inhibit=1 will prevent power down saves. (Default is `inhibit = 0`) If the command is given without argument, a save position shutdown will be initiated whereby the axes will be halted, positions saved to flash memory, and the controller placed in a non-responsive condition until power is cycled.

Reply

Upon the start of execution of this command, the controller will reply with a : . When the execution is complete, an A will follow the colon. When a power down condition is detected, an O is transmitted. After the positions are successfully saved, a K is sent.

Note 1: During the time interval between the : and the A , no serial or manual moves should be given.

Note 2: In MS2000 Versions 6.1u and later (see `VERSION` command), limit settings (see'' SETLOW'' and SETUP) are saved if and only if the `SAVEPOS` command is issued after the command `SAVESET Z`.

Note 3: OK is not transmitted in TG-1000

Command:SAVESET (SS)

MS2000 or RM2000 syntax

Shortcut	SS
Format	SAVESET [X][Y][Z]

Tiger syntax

Shortcut	SS
Format	[addr#]SAVESET [X][Y][Z]
Type	Card-Addressed

SAVESET allows the user to save current parameters settings to Flash memory.
SAVESET Z, saves settings to flash memory
SAVESET Y, restores previously saved settings after a SAVESET X
SAVESET X, will reload factory defaults upon next power-up

Reply

Upon the start of execution of this command, the controller will reply with a : .

When the execution is complete, an A will follow the colon.

Note 1: During the time interval between the : and the A , no serial or manual moves should be given.

Note 2: In MS2000 Versions 6.1u and later (see VERSION command), limit settings (see SETLOW and SETUP) are saved if and only if the SAVEPOS command is issued after the command SAVESET Z.

Example

MS2000 example

```
SS Z
:A
```

Save the current settings to flash memory.

Tiger example

```
1SS Z
:A
```

Save the Tiger Card at Card Address 1's current settings to flash memory.

Command:SCAN (SN)

MS2000 or RM2000 syntax and Function

Shortcut	SN
Format	SCAN [X=scan_axis_x] [Y=scan_axis_y] [Z=scan_axis_z] [F=pattern]
Units	Integer
Remembered	Using SS Z
Firmware Required	SCAN MODULE or ARRAY MODULE

Sets which axes are to be used for 2D raster scan. The same axis settings **also apply to the ARRAY module**. The fast-scanned raster axis (horizontal) is defined by `scan_axis = 1`; the slow-scanned axis (vertical) is defined by `scan_axis = 2`. Single axis scans (1D) requires setting the unused axes `scan_axis = 0`, and the driven axis as `scan_axis = 1`. **Note: this is different from the Tiger usage of pseudoaxes X/Y/Z.**

To set multiple axes in the SCAN command, you will need to set all of the axes to 0 first.

If you try to set the axis index and that index is already assigned to another axis, then the value will not change. For example, if you use **SCAN X=2** and the Y axis is already set to index 2, nothing will happen. The solution is to set **SCAN Y=0** and then you will be able to change the X axis index.

No Arguments: The command SCAN initiates (or stops) a scan using parameters set with the SCANR and SCANV commands.

X: `[scan_axis_x]` Set or query the scan axis for the X axis.

Y: `[scan_axis_y]` Set or query the scan axis for the Y axis.

Z: `[scan_axis_z]` Set or query the scan axis for the Z axis.

Scan Axes for MS2000 only		
Code	**Name**	**Description**
0	`None`	No Axis
1	`Horz`	Fast Axis
2	`Vert`	Slow Axis

F: `[pattern]` The scan pattern may be set to 0 for RASTER scans or 1 for SERPENTINE scans. This setting defaults to RASTER for firmware with the `SCAN MODULE` included and `SERPENTINE` for firmware with the `ARRAY MODULE` included. When the number of lines (SCANV Z) is set to the default of 1 then the behavior is the same for both raster and serpentine scans.

Scan Pattern
`0` - RASTER
`1` - SERPENTINE

```
SCAN X? Y? Z?
```

```
:A X=Horz Y=Vert Z=None
SCAN X=0 Y=0 Z=0
:A
SCAN X=2 Y=1 Z=0
:A
SCAN X? Y? Z?
:A X=Vert Y=Horz Z=None
```

Tiger (motorized) syntax

Shortcut	SN
Format	[addr#]SCAN [X?] [Y=fast_axis_id] [Z=slow_axis_id] [F=pattern]
Units	Integer
Type	Card-Addressed
Remembered	Using [addr#]SS Z
Firmware Required	SCAN MODULE or ARRAY MODULE

Note multiple small changes in usage from MS-2000 command set.

No Arguments: The command SCAN initiates (or stops) a scan using parameters set with the SCANR and SCANV commands.

X: `[scan_state]` Specifying an argument for the pseudoaxis X in decimal sets the state directly (see table below; the value is simply the decimal representation of the corresponding state character). Note that the firmware expects only certain states to be set by the user (marked as “OK to set” in the table); setting to a different state may yield unpredictable results. Querying the pseudoaxis X value returns the character associated with the current state.

Y/Z: `[axis_id]` Specify the cards axis ID as the `fast_axis_id` or `slow_axis_id` (axis IDs are obtainable using Z2B query; they are 0 and 1 for X and Y axes respectively on a two-axis motor card). If `slow_axis_id` is set to 9 then a true single-axis scan will be executed (not even anti-backlash moves on the slow axis); if `slow_axis_id` is specified but the slow axis start and stop positions (NV X and NV Y) are equal then a single-axis scan will execute but the slow axis position will be checked at the scan turnaround points. **Note: this is different from the MS-2000 usage of pseudoaxes X/Y/Z.**

F: `[pattern]` The scan pattern may be set to 0 for RASTER scans or 1 for SERPENTINE scans.

Scan Axes for Tiger only		
Code (axis_id)	**Name**	**Description**
0	Horz / X / Z	First Axis
1	Vert / Y / F	Second Axis
9	None	No Axis

Scan states (SCAN_MODULE firmware)			
Char	**Dec**	**OK to set?**	**State**
I		No	Idle/disabled
S	83	Yes	Starts state machine
P	80	Yes	Stop (goes to idle state after cleanup)
a		No	Waits until slow axis move complete
b		No	Starts move along fast axis

Scan states (SCAN_MODULE firmware)			
Char	**Dec**	**OK to set?**	**State**
c		No	Waits for fast axis move to finish
d		No	Starts serpentine slow axis move
e		No	Waits until serpentine move complete
f		No	Used in `XF_SPIM` only
g		No	Waits until retrace is complete
h		No	Scan complete, cleans up
t		No	Scan init, if `scan_overshoot` is not 0 (`NV T`)

Tiger (micro-mirror) syntax

Shortcut	SN
Format	[addr#]SCAN [X=state]
Units	Integer
Type	Card-Addressed
Remembered	Using [addr#]SS Z
Firmware Required	MM_SPIM

No Arguments: Starts or arms the SPIM state machine or terminates it if running or armed (starts state machine execution for Micro-mirror, puts in arm state for piezo). By so doing, any active single-axis functions will be stopped and the SPIM positions/steps will be calculated according to the active parameters (e.g. SAA, SAO, NR, NV, RT).

X: `[state]` Specifying an argument for the pseudo-axis X in decimal sets the state directly (see table below; the value is simply the decimal representation of the corresponding state character). Note that the firmware expects only certain states to be set by the user (marked as “OK to set” in the table); setting to a different state may yield unpredictable results. Querying the pseudo-axis X value returns the character associated with the current state.

Micro-mirror SPIM states (MM_SPIM firmware)			
Char	**Dec**	**OK to set?**	**State**
I		No	Idle/disabled
S	83	Yes	Starts main acquisition state machine
a	97	Yes	Arm for trigger (goes to state 'A')
A		No	Armed and waiting
T	84	Yes	Trigger from state 'A' (Requires firmware v3.37+)
P	80	Yes	Stop (goes to state 'I')
M		No	In middle of sheet (executing per-sheet scan/camera/laser state machines)
s		No	Starting sheet
c		No	Incrementing sheet
R		No	Starting side
y		No	Delay between sides
Y		No	Delay between repeats

Note: Other undocumented states may be used during SPIM state machine execution.

Command:SCANR (NR)

MS2000 or RM2000 syntax

Shortcut	NR
Format	SCANR [X=start] [Y=stop] [Z=enc_divide] [F= #_pixels] [R=retrace_speed]
Units	X and Y in mm, Z and F as integer, R as percentage (0-100)
Remembered	Using SS Z
Firmware Required	SCAN MODULE

Tiger (motorized) syntax

Shortcut	NR
Format	[addr#]SCANR [X=start] [Y=stop] [Z=enc_divide] [F= #_pixels] [R=retrace_speed]
Units	X and Y in mm, Z and F as integer, R as percentage (0-100)
Type	Card-Addressed
Remembered	Using [addr#]SS Z
Firmware Required	SCAN MODULE

Sets up raster scan start and stop positions, with the position values expressed in millimeters. During scanning, the stage will move past both of these positions slightly, so that when scanning within the range specified, the scan proceeds with uniform speed (set by the SPEED command). On units equipped with hardware position Sync, the output pulse goes high as the stage crosses the start position.

X [`start`]**:** The `start` position in millimeters.

Y [`stop`]**:** The `stop` position in millimeters.

Z [`enc_divide`]**:** On systems with the `ENC_INT` firmware module, an output pulse will occur every `enc_divide` number of encoder counts.

F [`#_pixels`]**:** If the user specifies the `#_pixels`, the stop position will be calculated based upon the enc_divide and start position. Applicable to `ENC_INT` only.

MS-2000 v9.54 or Tiger v3.30 required
R [`retrace_speed`]**:** Specify the speed of the retrace move as a percentage of the max speed (decimal value between 0 and 100). The default value of 67% was hardcoded previously.

Tiger micro-mirror syntax

Shortcut	NR
Format	[addr#]SCANR [X=scans_per_slice] [Y=slices_per_volume] [Z=SPIM_mode] [F=volume_repeats] [R=slice_repeats]
Units	Integer
Type	Card-Addressed
Remembered	Using [addr#]SS Z
Firmware Required	MM_SPIM

Sets up the high-level operation of the SPIM state machine coordinated by the Micro-mirror card

scans_per_slice (**X**): sets the number of one-way beam scans in each slice (recall the slice corresponds to one image). Minimum value is 1.

slices_per_volume (**Y**): sets the number of slices (or images) in each volume. No facility exists to make it different for the two sides, though in principle it is possible. Minimum value is 1.

SPIM_mode (**Z**): sets a byte (by assigning a decimal) with the functions below. The default value is 2 (usual diSPIM, no special functionality).

- 2 LSBs correspond to single-sided vs. double-sided and the specified start side according to the following
    - 3 for diSPIM starting on opposite side
    - 2 for usual diSPIM (default)
    - 1 for usual iSPIM
    - 0 for iSPIM on opposite side
- Bits 2-3 were laser output mode in v2.85-v2.87; for v2.88+ this functionality is instead controlled by LED Z laser mode, bits 0-2.
- Bit 2 is set to disable micro-mirror moving to home position when other side is active during the SPIM state machine (i.e. rely completely on laser-based blanking while reducing micro-mirror movements). Default is unset (home move enabled). (v2.89+)
- Bit 3 is set to disable piezo moving to illumination position (home). Default is unset (piezo home enabled). (v2.89+)
- Bit 4 is set to alternate sides after each piezo/slice position (for interleaved stage scan). Note that piezo trigger signals will continue, but this is OK for the stage scan situation when the piezos' SAA value is 0 and either the piezo's SAO position is the same as the offset or else bit 3 is set. Default is unset (not alternating sides). (v3.09+).
- Bit 5 is set to alternate the beam scan direction between sweeps (either between slices or within same slice if the number of line scans per slice is more than 1). Default is unset (not alternating direction). Before v3.14 this was set using the LSB of the SAP setting. (v3.14+).
- Planned but not yet implemented: Bit 6 is set to add one extra camera trigger at the end of each side. Use this to accommodate "synchronous" or "overlap" camera mode without requiring an entire additional slice. Default is unset (no extra camera trigger). Proper operation requires the side delay (NV Y) be longer than the sum of the camera delay (NV T) and the camera duration (RT T). Because this occurs during the side switch time the total acquisition time is only increased by the time required for the final camera trigger.
- Bit 7 is set to have the slice axis move in a continuous linear fashion instead of in stairstep (i.e. when set it moves continuously during each slice) (v3.5+)

volume_repeats (**F**): sets the number of volumes to be collected per trigger event (two sides count as a single volume). Minimum value is 1.

slice_repeats (**R**): sets the number of slices to be collected at each piezo position. Minimum value is 1.

Command:SCANV (NV)

MS2000 or RM2000 syntax

Shortcut	NV
Format	SCANV [X=start] [Y=stop] [Z=number_of_lines] [F=overshoot_factor]
Units	X and Y in mm, Z in integer, F in positive real
Remembered	Using SS Z
Firmware Required	SCAN MODULE

Tiger motorized stage syntax

Shortcut	NV
Format	[addr#]SCANV [X=start] [Y=stop] [Z=number_of_lines] [F=overshoot_time] [T=scan_overshoot]
Units	X and Y in mm, Z in integer, F in ms
Type	Card-Addressed
Remembered	Using [addr#]SS Z
Firmware Required	SCAN MODULE

X, Y, and Z parameters set up the slow-scan (vertical) start and stop positions, with the position values expressed in millimeters, and the number of lines. The stage will move to the start position before beginning the scan. The scan range will be divided into number_of_lines lines. Following a completed horizontal scan, the stage will move vertically to the next scan line. The processes will conclude when the stage has moved to the vertical stop position and completed the last horizontal scan. If the start and stop values are identical then a 1-D scan will occur, repeated number_of_lines times.

The F and T parameters pertain to the fast-scan (horizontal scan) motion, and there is a difference between the behavior of the F parameter on TG-1000 vs. MS-2000.

On MS-2000, overshoot_factor (F) sets the additional amount of travel for the stage velocity to settle before reaching the start position. The additional distance beyond the initial ramp is given by (ramp-up distance) * (2 * overshoot_factor -1). So the default overshoot_factor=1.0 results in an additional settling distance of the ramp-up distance, which is traversed in half the AC time. Use a larger number to allow more time to reach constant speed before the start position. Using a value of 0.5 will result in the start position being reached approximately as the ramp up is completing.

On TG-1000, overshoot_time (F) sets an additional settling time in ms for the stage velocity to settle before reaching the start position (beyond the always-required ramp time set by the AC command). Thus the time required between scan line initiation and reaching the start position is given by summing the AC time and the NV F time. The same delay occurs after the stop position except for raster scans in firmware v3.20 and higher in which case the after-stop overshoot time is capped at 10ms. The default value is 50ms.

The T parameter was partially implemented for TG-1000 firmware versions 3.17 and 3.18, absent in 3.19, and then present in 3.20 and greater. It is intended mostly for scan-optimized stages that have a significant amount of physical backlash. The default value is 0.02 when the SCAN_OPTIMIZED define is enabled and 0 otherwise. If the value is non-zero there are several changes to the scan operation: (1) There is an extra overshoot move performed (with amplitude specified by the

parameter) before any scan move in either direction, which ensures that the physical backlash is removed correctly before beginning each scan pass. (2) Before the scan moves begin, an initialization move to the center of the range is made to ensure that the overshoot move happens correctly. (3) When the scan moves are complete, the stage moves to the center position (otherwise behavior is to move to the start position).

Tiger micro-mirror SPIM syntax

Shortcut	NV
Format	[addr#]SCANV [X=scan_delay] [Y=side_delay] [Z=repeat_delay] [F=scan_settle_time] [R=laser_delay] [T=camera_delay]
Units	X, Y, Z, F, R and T are in milliseconds
Type	Card-Addressed
Remembered	Using [addr#]SS Z
Firmware Required	MM_SPIM

Sets up various delays used in the high-level operation of SPIM state machine coordinated by Micro-mirror card. The delays are specified in ms with 0.25ms resolution. The lower limit is 0.0ms and the upper limit is a bit more than 16 seconds for all except repeat_delay which can be over a day.

scan_delay (**X**): sets the delay between the start of the slice and when the beam scan begins.

side_delay (**Y**): sets the delay between the start of a side and when slices start. Defaults to 50 ms in v3.14+ (in v3.13- default was 0). In v3.14+ cannot be less than 2.0 ms. It is highly recommended to use a value of at least 10 ms; the signal for the piezo to move to illumination position takes 2.5 ms to send and the piezo has a mechanical response time (typ. 10 ms for 90% settling). In most cases even more time should be allowed for any vibrations resulting from the piezo move to settle, e.g. a typical value of side_delay is 50 ms or 100 ms.

repeat_delay (**Z**): sets the delay after one volume (either one or two sides) before the next one begins. In v3.14+ cannot be less than 1 ms.

scan_settle_time (**F**): (v3.14+) sets the amount of time before the scan start that the scanned axis will reach its initial position; before that it will ramp smoothly from the previous position to the initial position. Defaults to 1 ms. If the value of scan_settle_time is equal to or greater than the value of scan_delay there will be an abrupt transition at the corresponding point. Such an abrupt transition can lead to undesired scanner ringing and happened in all cases prior to firmware v3.14.

laser_delay (**R**): sets the delay between the start of the slice and when the laser control output goes high.

camera_delay (**T**): sets the delay between the start of the slice and when the camera trigger output goes high.

Command:SECURE (SC)

This command is used to lock and unlock the Micro Servo (U_SERVO_LK) and the Solenoid based (SOL_LK) lock inserts. SECURE command has a bit more functionality in the case of Solenoid Lock insert.

For Micro Servo Lock Insert

Shortcut	SC *requires v9.56*
Format	SECURE [X=p]
Remembered	Using SS Z
Hardware/Firmware Module Required	Micro Servo Lock Insert and U_SERVO_LK

With stages equipped with Micro Servo lock mechanism, this command is used to lock or unlock samples on the stage. The value of p determines the position of the lever arm and can be any decimal number between 0.0 and 1.0. A value of 1.0 fully retracts the lever. The best value for a particular well plate model may vary and can be determined experimentally.

Example:

```
SECURE X=1.0
:A
```

Fully opens lever

```
SECURE X=0.25
:A
```

Closes lever for typical well plate

```
SECURE
:N-3
```

Error - axis required

```
SECURE Y=0
:N-2
```

Invalid axis

```
SECURE X?
:N-2
```

Invalid operation

For Solenoid Lock insert

MS2000 or RM2000 Syntax and Function

Shortcut	SC *requires v9.56*
Format	SECURE [X=0 or 1] [Y=0 to 99] [Z=0 to 99] [F=0 to 255] [T=0 to 65000]
Remembered	Using SS Z
Hardware/Firmware Module Required	Solenoid Lock Insert and S0L_LK

Tiger Syntax and Function

Shortcut	[addr#]SC *requires v3.55 (Tiger Comm)*
Format	[addr#]SECURE [X=0 or 1] [Y=0 to 99] [Z=0 to 99] [F=0 to 255] [T=0 to 65000]
Remembered	Using [addr#]SS Z
Hardware/Firmware Module Required	Solenoid Lock Insert and S0L_LK

With inserts equipped with Solenoid lock mechanism, this command is used to lock or unlock samples on the stage.

X argument accepts either “0” or “1”. “0” is the locking command , and “1” is the unlocking command. The Solenoid use no power when in “0” or lock position , so this is the default and the controller's initial state.

Y arguments is a percentage of power briefly applied to the solenoid to pull the lever back and unlock the wellplate. Set by factory, we recommend that this setting not be adjusted unless suggested by ASI support.

Z arguments is a percentage of power applied to the solenoid to keep it unlock. After unlocking, the solenoid needs very little power to keep the lever pulled back and keep the well plate unlocked. Set by factory, we recommend that this setting not be adjusted unless suggested by ASI support.

F argument sets the auto lock time, units are in minutes. When in unlock position , the solenoid is consuming power, over time solenoid will heat up and may damage it. There is a auto locking timer , Y sets the maximum time the solenoid stays unlocked , after which the controller auto locks. Default is 5 min . This feature can be disabled by setting Y as “0”, this is not recommended.

T argument, units are in milliseconds. This arguments sets the amount of time higher power (Y arguments) needs to be applied to unlock the wellplate. After that lower power (Z arguments) is applied to keep the wellplate unlocked. Set by factory, we recommend that this setting not be adjusted unless suggested by ASI support.

Note 1: Solenoid only consumes and dissipates power when in the unlock state. Over time the heat generated by this power dissipation may damage the solenoid. Only unlock when needed.

Note 2: TTL Out mode must be set to TTL Y=9. This gives control of the TTL out connector to the SECURE command.

MS2000 Example:

```
SC X=1
:A
```

Fully opens lever, unlock state

```
SC X=0
:A
```

Closes lever, lock state

```
SC
:N-3
```

Error - axis required

```
SC X=1 F=2
:A
```

Lever unlocks, and will auto lock after 2 minutes

```
SC X?
X=1 :A
```

Reply 1 indicates the lever is in unlock state.

Command:SETHOME (HM)

MS2000 or RM2000 syntax

Shortcut	HM
Format	HM [axis]=[position in mm]...
Units	Millimeter
Remembered	Automatically
Required MS2000 Firmware Version	8.0+

Tiger syntax

Shortcut	HM
Format	HM [axis]=[position in mm]...
Units	Millimeter
Type	Axis-Specific
Remembered	Automatically

This command sets/displays a fixed hardware HOME location for an axis in units of millimeters. The

HOME position is considered a fixed hardware location and is adjusted properly when the controller's coordinate system is altered with the HERE or ZERO function. The HOME position is automatically remembered and recalled through a power cycle and does not need to be saved using the SAVESET command. The home position defaults to a large positive number far exceeding the mechanical limits of the system, or else with the upper limit for DAC devices including piezos, micro-mirror, and tunable lenses.

`HM [axis]+` will set the home position to be the current position. Restore the default home position by executing `HM [axis]-`.

Reply

If there are no errors, a reply of :A is returned.

Example

```
HM X?
:A X=1000.000
```

In the above example the default location for the HOME position for the X-axis is returned.

Command:SETLOW (SL)

MS2000 or RM2000 syntax

Shortcut	SL
Format	SETLOW [axis]=[position in mm]...
Units	Millimeters
Remembered	Automatically

Tiger syntax

Shortcut	SL
Format	SETLOW [axis]=[position in mm]...
Units	Millimeters
Type	Axis-Specific
Remembered	Automatically

This command sets/displays the lower firmware limit for an axis. The limit is considered a fixed hardware locations and are adjusted properly when the controller's coordinate system is altered with the HERE or ZERO commands. The limit positions are automatically remembered and recalled through a power cycle and do not need to be saved using the SAVESET command.

`SL [axis]+` will set the lower limit to be the current position. Restore the default limit by executing `SL [axis]-`. The +/- operand syntax is supported as of Tiger firmware v2.8 and MS-2000 firmware as of roughly 2013.

The corresponding command for the lower firmware limit switch is the SETLOW command.

Reply

If there are no errors, a positive reply of :A followed by the startup sequence. For the Z axis only, input values equal to or greater than the current SETUP parameter value are acknowledged by :A but ignored.

Example

```
SL X=-50 Y=-50 Z?
:A Z=-110.000
```

In the above example, the lower limit for the X and Y axes have been set to 50 millimeters from the origin in the negative direction. Note that the Z? resulted in the controller returning the current position of the Z lower firmware limit switch.

Note 1: If this value is equal to or greater than the value for SETUP, then the controller will operate incorrectly. See also Note 2.
Note 2: When the direction of an axis is negative (see CCA Z=###), upper limit settings must be negative values, and lower limit settings must be positive values.
Note 3: For clocked devices (e.g. filter sliders, turrets) the lower limit is always 1.

Command:SETUP (SU)

MS2000 or RM2000 syntax

Shortcut	SU
Format	SU [axis]=[position in mm]...
Units	Millimeters
Remembered	Automatically

Tiger syntax

Shortcut	SU
Format	SU [axis]=[position in mm]...
Units	Millimeters
Type	Axis-Specific
Remembered	Automatically

Same as SETLOW command (see above) but for upper firmware limit switch.

Note 1: If this value is equal to or less than the value for SETLOW, then the controller will operate incorrectly. See also Note 2.
Note 2: When the direction of an axis is negative (see CCA Z=###), upper limit settings must be negative values, and lower limit settings must be positive values.

Note 3: For clocked devices (e.g. filter sliders, turrets) the upper limit is always the number of positions. Querying the value is useful for determining how many positions.
Note 4: As of Tiger firmware v2.8, `SU [axis]+` will set the upper limit to be the current position. Restore the default limit by executing'' SU [axis]-''.

Note: The SH shortcut to this command was deprecated in MS-2000 v9.50 and Tiger v3.50, please use SU instead.

Command:SI

This command has two distinct functions depending on whether the system uses linear encoders `SEARCH INDEX` or rotary encoders `SEEK LIMITS`.

This functionality is available by request from ASI. It is not included with standard firmware.

Linear Encoder and SEARCH INDEX

MS2000 or RM2000 syntax

Shortcut	SI
Format	SI [axis]=[position in 1/10 microns]...
Units	1/10 microns
Firmware Version Required	v8.4+

Tiger syntax

Shortcut	SI
Format	SI [axis]=[position in 1/10 microns]...
Units	1/10 microns
Type	Axis-Specific

This command searches for the physical centers of the stage and marks it with a user inputted value. Software limits are reset to default. Note, if the command is rerun again it will fail and print the “N-5” error. To avoid this, move the axis off-center, zero the position and then issue the command.

Reply
If there are no errors, a positive reply of “:A” is sent back.

Example

```
SI X=0
:A
```

In the example, the controller searches for the center of X-axis and sets it to zero.

```
SI Y=20000
:A
```

In the example, the controller searches for the center of Y-axis and sets it to 2mm.

```
SI Y=0
:N-5
```

N-5, indicates center of axes could not be found. This could be because previous center value is same as the new value, or hardware and software issues.

```
SI X? Y?
:A X=0 Y=0
```

In this example the X and Y axes are being queried for the current setting of the axes centers. The response is what they have previously been set to (not necessarily 0).

Rotary Encoder and SEEK LIMITS

MS2000 or RM2000 syntax

Shortcut	SI
Format	SI [axis] = [1 or -1]...
Units	1 or -1 as direction
Firmware Version Required	v8.8e+

Tiger syntax

Shortcut	SI
Format	SI [axis] = [1 or -1]...
Units	-
Type	Axis-Specific

If `1`, then the stage seeks the upper limit. If `-1`, then the stage seeks the lower limit.

The stage moves to the hardware limit, backs away 3 mm, then approaches the limit slowly enough to maximize repeatability of the result. The recommended procedure is as follows, with `SI` and HERE commands using one or more axis arguments:

- Send SI command.
- Poll with STATUS command until ‘N’ is received.
- Send HERE command with desired real world position.

Reply
If there are no errors, a positive reply of “:A” is sent back after issuing the command. If an error occurs during execution it will be reported then.

Example

```
SI X=1 Y=-1
:A
```

In this example the command is issued to seem the X axis positive limit and the Y axis negative limit.

```
SI X? Y?
:A X=0 Y=0
```

In the example the X and Y axes are being queried for the current setting for the direction to seek the limits.

** Auto Homing For Clocked Devices like Sliders **
As of firmware 9.2l (for MS2000) and 3.18 (for Tiger) Seek Limit routine performs an additional step for clocked devices. After finding the Limit it moves a set distance (distance is specified as Home Position Command:SETHOME) and zeros itself there. By default, the distance between Upper limit and Slot 1 is saved in Home position , so when Seek Limit is run , the controller is able to move the slider to position 1 by finding the limit and moving a set distance from it.

Command:SPEED (S)

MS2000 or RM2000 syntax

Shortcut	S
Format	SPEED [axis]=[max speed in mm/sec]...
Units	mm/sec
Remembered	Using SS Z

Tiger syntax

Shortcut	S
Format	SPEED [axis]=[max speed in mm/sec]...
Units	mm/sec
Type	Axis-Specific
Remembered	Using [addr#]SS Z

Sets the speed at which the stage will move during the middle of a commanded move (e.g. using `MOVE`, `MOVREL`, or the `home` joystick button; speed during joystick moves is separate and set using the JSSPD command). The start of the move has a ramp-up period and the end of the move has a ramp-down period plus a separate landing phase. Duration of the ramps is set by the AC command, and the landing phase is discussed on the tuning page.

Speed is set in millimeters per second. Maximum speed setting is is ~7.68 mm/s for standard 6.35 mm pitch leadscrews (4 TPI). See the page on lead screw pitch options. Default speed is ~67% of the max speed.

The stage might not be able to keep up with the firmware-set maximum speed depending on mechanical load and internal friction, and for that reason the advertised maximum speeds are a bit less than the maximum firmware setting (but advertised max speeds are always attainable with typical loads).

The maximum possible speed setting can be determined by setting the speed to a very high number, querying the resulting speed, and then restoring the original setting.

Reply

If there are no errors, a positive reply of :A is sent back.

Example

```
s x? y?
:A X=5.745920 Y=5.745920
S X=1.23 Y=3.21 Z=0.2
:A
```

In the example, the X-axis maximum speed is set to 1.23 mm/s, the Y-axis is set to 3.21 mm/s, and Z-axis is set to 0.2 mm/s.

Special use for MMIRROR_SLAVE on Micro-mirror card

On a Micromirror card with the MMIRROR_SLAVE define the SPEED command has a special meaning (it is otherwise unused with micro-mirror cards) starting in v3.18. It sets the scaling of the slave axis. The default scale is 0.5, meaning the electrical outputs corresponding to the invisible slaved axis will move half as far as the main axis.

Command:SPIN (@)

MS2000 or RM2000 syntax

Shortcut	@
Format	SPIN [axis]=[-128 to 128]…
Units	Integer

Tiger syntax

Shortcut	@
Format	SPIN [axis]=[-128 to 128]…
Units	Integer
Type	Axis-Specific

Tells controller to ‘spin’ the motor of specified axis at a rate expressed as its DAC value, a bit value from -128 to 128. This causes the motor to run in open-loop mode with no position or speed feedback.

Reply

If there are no errors, a positive reply of :A is sent back.

Example

```
@ X=100 Y=-100 Z
:A
```

This example shows a command that will instruct the X-axis turn at a motor rate of 100 DAC bits in one direction, the Y-axis at the same rate but in the other direction, and stop any rotation or motion of the Z-axis.

Note 1: To stop rotation, give a value of zero, or just the type the axis letter without an assignment as shown in the example above, or use the HALT command.

Note 2: The `HALT` command will not return an :N-21 when stopping a `SPIN` command.

- Command:MOVE (M)
- Command:MOVREL (R)
- Command:SPIN (@)
- Command:VECTOR (VE)

Command:STATUS (/)

MS2000 or RM2000 syntax

Shortcut	/
Format	STATUS

Tiger syntax

Shortcut	/
Format	STATUS
Type	Broadcast Command

Inquires regarding the motor status of all axes. Queries the controller whether or not any of the motors are still busy moving following a serial command.

Reply

N - Not Busy: there are no motors running from a serial command
B - Busy: there is at least one motor running from a serial command

Note: Using the **/ (forward slash)** shortcut is the preferred method for rapid polling of the controller for a busy state. The shortcut is handled more quickly in the command parser.

Example

```
MOVE X=12345
:A
STATUS
B
/
N
```

In this example, the command MOVE started the X-axis moving towards the position 1.2345 millimeters from the origin. The first STATUS command returned a B showing that the motor is still busy moving towards the target. The second time, the STATUS command returned a N signifying that the MOVE command is finished and there is no longer any motor movement. The second command (/) is processed faster.

Command:STOPBITS (SB)

Shortcut	SB
Format	STOPBITS [X?] [X=n]
Units	Integer [1 or 2]
Remembered	Using SS Z

N: Sets the number of stop bits, n, to be used for RS-232 serial communication. The default is one 1 stop bit; the other option is two 2 stop bits. Use the SAVESET Z command to retain the new stop bit setting after power off.

This command is only available on the MS-2000.

Command:TTL

TTL functionality differs based on whether the controller is a Tiger (TG-1000) or MS2000/RM2000 controller, due to hardware differences. Some TTL modes are only available with certain firmware modules.

The Tiger (TG-1000) and MS2000 controller electronics have a buffered TTL input (IN0) and output (OUT0) port that are usually connected to the IN and OUT BNC connectors on the back of the controller. These ports allow voltages in the range of 0V to 5V as an input, where any voltage below 0.95v(+-0.3v) is a LOGIC LOW signal. Any signal above 1.6 V (+-0.3 V) is considered a LOGIC HIGH state. Any signals in between 0.95 to 1.6 V will maintain the same logic state that was registered from the last *known* state (Schmitt Triggered inputs). The TTL input has a 10K Ohm resistor to ground, and connecting to the input of a Schmitt Trigger 5v TTL gate. The output is CMOS-compatible 5v TTL directly from a single CMOS gate. The behavior of these connectors are determined by the IN0_mode and OUT0_mode parameters set by the TTL X and TTL Y commands respectively. There are also has several unbuffered I/O ports on the motherboard that are occasionally exposed for special purposes.

Warning! Absolute maximum voltage to be applied to ASI's controller: -0.5 V to 5.5 V. Any voltage applied that is greater than 5.5 V or less than -0.5 V will void the warranty and may cause damage to the controller!

On Tiger TG-1000 controllers, some cards have buffered TTL input (`IN0`) and output (`OUT0`) ports exposed, in which case the behavior is determined by the `IN0_mode` and `OUT0_mode` parameters set by the TTL X and TTL Y commands respectively. The TTL command is Card-Addressed, meaning that on Tiger it applies to each card separately. A few Tiger cards have extended functionality using the `TTL_AUXILIARY` firmware module affected by the TTL R and TTL T commands.

On older versions of the MS2000 and TG1000 firmware, you may need to enable the axes with the RM Y=# command for TTL-triggered ring buffer moves if the default value is incorrect. After MS2000 version 9.2o, the default is 3.

Sending the command RM without any other arguments sets the TTL input interrupt flag and performs the same operation that a single TTL IN0 input pulse would control as determined by the current IN0_mode. See RBMODE (RM)

MS2000 or RM2000 syntax

Format	TTL [X=IN0_mode] [Y=OUT0_mode] [F=OUT0_polarity] [T=report_mode] TTL Firmware v9.2k+ required.
Remembered	Using SS Z

Unless otherwise specified, the TTL commands used for Tiger apply to all MS-2000 based systems as well.

Tiger syntax

Format	[Addr#]TTL [X=IN0_mode] [Y=OUT0_mode] [Z=aux_IO_state] [F=OUT0_polarity] [R=aux_IO_mask] [T=aux_IO_mode] [Addr#]TTL Firmware v3.16+ required.
Type	Card-Addressed
Remembered	Using [Addr#]SS Z

TTL Input Mode

IN0_mode

---

0 - Turns off TTL IN0 controlled functions; TTL interrupt DISABLED.

---

1 - TTL IN0 initiates a Move-to-Next-Position of the stored positions in the ring buffer pointed to by the `buffer_pointer`. When the `buffer_pointer` reaches a value equal to the number of saved positions, it resets to the first position, allowing cyclic repetitions to the saved locations. See RBMODE

and LOAD commands.

---

2 - TTL IN0 repeats most recent relative move (see MOVREL command). For example, begin a session by issuing the command `RM Y=7`, then `MOVREL X=0 Y=0 Z=10`, and each subsequent TTL trigger will cause the Z axis to move 1 micron[2)]. This function can be used for repetitive relative moves of any axis or combination of axes on the controller (for MS-2000) or on the card (for Tiger). For the “focus axis” only you may directly set the dZ value with the ZS command's X parameter.

As of `MS2000 9.2o` and `Tiger v3.38` only the axes that are enabled with RM Y=# will be moved. The default axis mask is 3, for X and Y only to match with legacy firmware. Also, the BACKLASH setting is ignored during TTL-triggered relative moves, on earlier versions of the firmware you will see incorrect results with fast TTL pulses if the backlash is not set to `0`.

---

3 - TTL IN0 initiates an autofocus operation on systems with autofocus installed.

---

4 - Enables TTL IN0 controlled Z-stacks (see the ZS command).

---

5 - Enables TTL IN0-started serial position reporting. Information is asynchronously sent out to the serial interface every `report_time` interval, where `report_time` is set with the RT command. Data returned in the serial stream are the elapsed time in milliseconds since the TTL trigger, followed by the position of each axis enabled by the `axis_byte` (set by the RM command). On `TRACKING` systems, the PMT sum signal is also reported. Reporting is toggled on and off by triggering the TTL input.

---

6 - On the rising edge of a TTL pulse, initiate a stage scan if the scan state is `IDLE`. This is equivalent to sending the SCAN command without arguments to initiate a scan. Note: unlike the scan command, subsequent triggers will not stop the stage scan.

---

7 - TTL commanded ARRAY move to next position.

MS-2000 v9.54 or Tiger v3.54 required
8 - TTL commanded ARRAY move to next position, that does a Z-stack at each array position (see the ZS command).

---

9 - Used with CRISP focus lock. TTL IN0 HIGH engages lock if the system is in the READY state. TTL IN0

LOW will cause the system to UNLOCK if it is locked already.

---

10 - Toggle TTL OUT0. If TTL OUT0 is set either LOW or HIGH, an input pulse on the TTL IN0 will cause the output to toggle to the other state.

Tiger v3.31 required
11 - SERVOLOCK_TTL mode. Requires the SERVOLOCK_TTL firmware module. To engage the SERVOLOCK_TTL mode use the LK command which will automatically change the TTL IN0 mode and normally will restore it afterwards. When the SERVOLOCK_TTL mode is engaged do not change the TTL X setting.

Not yet implemented for MS2000.

MS-2000 v9.52 or Tiger v3.24 required
12 - Behavior is exactly the same as mode 1 above except the moves are relative rather than absolute.

> **CAUTION:** If you are using TTL X mode 12, the values entered into the ring buffer using the LOAD command represent RELATIVE coordinates, not ABSOLUTE coordinates. You must drive the stage to the appropriate starting position before triggering a ring buffer sequence.

MS-2000 v9.2l or Tiger v3.14 required
20 - The TTL IN0 pulse turns on the TTL OUT0 for a fixed duration set by the ''RT Y'' command.

Can be used with a LED illumination to act as a flash of defined duration. For the TGLED card and MS2000/RM2000 with a Dual LED card (DLED), all LED channels remain off until a TTL pulse is received, and the TTL rising edge turns all LED channels ON and they remain ON for the duration set by the RT Y command. [3)] LED intensity is set by the LED command.

MS-2000 v9.2l or Tiger v3.14 required
21 - Similar to mode 20 except TTL pulses cycle through the channels of the TGLED card or Dual LED card. On each TTL pulse, only ONE LED channel turns ON for a fixed time. The next TTL pulse turns on the next LED channel for a fixed time, and so on.

For Tiger v3.24 and later, when RB F=3 the TGLED card cycles through all channels without waiting for TTL pulses. If an intensity is set to 0 using the LED command then that channel is automatically skipped.

MS-2000 v9.2n or Tiger v3.30 required
22 - Similar as mode 20 except waits for TTL pulse to go low before turning off the LED. Setting RT Y

isn't required.

MS-2000 v9.2n or Tiger v3.30 required
23 - Same as mode 21 except waits for TTL pulse to go low before turning off the LED. Setting RT Y isn't required.

Tiger v3.30 required
30 - Used with Single Axis Modes 2 and 4, see the SAM command.

Mode 2: On the rising edge of a TTL pulse, the routine is performed once.
Mode 4: On the rising edge of a TTL pulse, the routine runs continuously.

Not yet implemented for MS2000.

MS-2000 v9.2n required
103 - Repeating Autofocus. This mode does not use TTL IN. When set, the controller will automatically attempt an autofocus routine every *K* milliseconds indefinitely until TTL X is changed. The repetition time, *K*, is set using RTIME X. Example: **RT X=5000** will set the repetition rate to 5 seconds. This is effectively the same as using **TTL X=3** with an oscillator connected to TTL IN.

TTL Output Mode

OUT0_mode

---

0 - TTL OUT0 unconditionally set LOW.

---

1 - TTL OUT0 unconditionally set HIGH.

---

2 - generates TTL pulse at end of a commanded move (`MOVE`, `MOVREL`, move via ring buffer, or via array module). The pulse duration is set with command RT Y. Note that any move that is initiated before the pulse duration is complete, will reset the duration timer and make the TTL output low immediately. For sequenced (automatic) array moves, use RT Z to set the delay before the next array element is sequenced.

---

3 - ~~output TTL OUT0 gated HIGH during axis index 0 (X) constant speed move~~ **not implemented but `hardware-level TTL signal` is available**.

---

4 - ~~output TTL OUT0 gated HIGH during axis index 1 (Y) constant speed move~~ **not implemented but `hardware-level TTL signal` is available**.

---

5 - ~~output TTL OUT0 gated HIGH during axis index 2 (Z) constant speed move~~ **not implemented but `hardware-level TTL signal` is available**.

---

8 - TTL OUT0 timed arrival pre-pulse output. See RT command. Requires PREPULSE firmware module.

---

9 - TTL OUT0 PWM and MicroServo or Solenoid output. See the LED or the SECURE command. Requires LED_DIMMER or USERV0 or SOL_LK firmware module. On WK, with LED_DIMMER, the PWM frequency is 1KHz.

---

10 - Output TTL OUT0 gated HIGH upon completion of video AUTOFOCUS function. AUTOFOCUS hardware and firmware required.

---

11 - Generates TTL OUT0 pulse at end of commanded move providing CRISP is in ‘F’ state (active and within tolerance). Waits for CRISP ‘F’ state after move completion to send a pulse. Generally not useful with TG-1000 controllers because the XY and focus axes are on different cards. ON MS-2000 the behavior of the STATUS command is modified when this TTL mode is set: 'N' is returned when CRISP is in the In-Focus 'F' state and otherwise 'B' is returned. The pulse duration is set with command RT Y. Note that any move that is initiated before the pulse duration is complete, will reset the duration timer and make the TTL output low immediately. For sequenced (automatic) array moves, use RT Z to set the delay before the next array element is sequenced.

---

12 - TTL OUT0 high when CRISP is in the F state, low otherwise.

---

20 - TTL OUT0 set during SPIM state machine operation. Requires ''MM_SPIM ''firmware module (TG-1000 only). Was code 10 until v3.12.

---

21 - TTL1 backplane signal (PLC address 42) set high at the end of a ring buffer move or AIJ-initiated

move (for laser trigger). Requires MM_TARGET firmware module (TG-1000 only). Was code 11 until v3.12. As of firmware v3.36 outputs to the TTL1 backplane signal instead of to the usual TTL output.

Tiger v3.17 required
22 - In this mode, TTL OUT0 is controlled by the single-axis function module. With the SAP command the user can generate a TTL pulse that is synchronized with single-axis function actuator motion. The pulse duration is set with command RT Y.

Tiger v3.38 required
30 - TTL OUT1 high when the position of first axis is more than the PC setting away from its target position.

Tiger v3.38 required
31 - TTL OUT1 high when the position of second axis is more than the PC setting away from its target position.

Tiger v3.38 required
32 - TTL OUT1 high when the position of third axis is more than the PC setting away from its target position.

Tiger v3.38 required
33 - TTL OUT1 high when the position of fourth axis is more than the PC setting away from its target position.

Tiger v3.61 or MS2000 v9.61 required
50 - TTL OUT0 immediately high for a period of time determined by the RT Y setting. This is the timed monostable version of mode 1. After the pulse has ended and TTL OUT0 is low again, CCA Y will be automatically reset to mode 0.

TTL Output Polarity

OUT0_polarity

1 - Default polarity

-1 - Invert the polarity of TTL OUT0

TTL Auxiliary (Tiger Only)

aux_IO_state

Z - Requires TTL_AUXILIARY firmware module; behavior depends on the firmware build and hardware present. Sets the state of the auxiliary TTL output according to the aux_IO_mask. Input and output as a decimal number representing the binary pattern desired. The following uses have been defined so far:

For MM_SPIM firmware with SPIM TTL card: Bit0 = Side0/Laser0 output, Bit1 = Side1/Laser1 output

aux_IO_mask

R - Requires TTL_AUXILIARY firmware module; behavior depends on the firmware build and hardware present. Controls how the aux_IO_state bits are used, or how the backplane is used when aux_IO_mode is set to 2. Input and output as a decimal number representing a binary mask. If the corresponding mask bit is set to 1 then the state bit will be reflected at the output, but if the mask bit is 0 then the state bit has no effect. The following uses have been defined so far:

For MM_SPIM firmware: Defaults to 3 = 0b00000011.

aux_IO_mode

T - Requires TTL_AUXILIARY firmware module; behavior depends on the firmware build and hardware present. The SPIM state machine overrides these setting during its operation.

Mode 0 - TTL outputs determined by aux_IO_state/mask.

Mode 1 - TTL outputs determined by the LED command (requires MM_LASER_TTL module). The default setting for MM_SPIM firmware.

Mode 2 - Simulates a TTL input from the backplane. The backplane value is masked by aux_IO_mask and the binary value is considered. If a 0-1 transition occurs then a TTL input pulse is simulated and action will be taken depending on the setting of IN0_mode. The default setting for TTL_AUXILIARY on piezo firmware.

Report Mode (MS-2000 Only)

report_mode - This mode requires the TTL_OUT_REPORT firmware module. MS-2000 v9.52 required.

T - Enables serial reporting on every output TTL pulse when set to be non-zero. Will output on separate serial port if enabled with compile-time flag.

Mode 51 - Outputs the following bytes in order:

Mode 51 Byte Order

If ARRAY_MODULE is defined

- X array index as 16-bit unsigned int (AIJ X? equivalent)
- Y array index as 16-bit unsigned int (AIJ Y? equivalent)

The next value is the Z-stack index (ZS T? equivalent, related to the ZS command)

Next the encoder value for all axes in order as 32-bit signed integer in twos-complement, 4 bytes per axis (can be converted to reported position using multiplier)

If CRISP is enabled

- CRISP error value as signed int
- CRISP sum value as signed int

Footer:

- carriage return '' '\r' ''
- 16-bit checksum calculated on bytes 1-20 according to IP header algorithm
- carriage return '' '\r' ''

IP header algorithm for checksum computation

- Treat every 2 bytes as 16-bit unsigned integer. Compute the running sum all 2-byte chunks in a 32-bit register.
- Sum the two halves of the 32-bit register, sum the resulting two halves again in the case of overflow, and subsequently perform a bitwise inversion: this is the 16-bit checksum value.
- To validate the checksum repeat the same steps but include the 16-bit checksum value in the running sum. The computed checksum should be 0000. If not there was an error in checksum generation or transmission of the data.

Example: firmware includes ARRAY_MODULE, CRISP and has X Y and Z axes. TTL Y=2 sets a TTL pulse at the end of the move. TTL T=51 sets this report format. The report will be a string of numbers like this (spaces for readability only)

```
0002 0001 0003 1E00 FFFF FFFF FFFF FFEE FC81 0679 0D DF0F 0D
```

where coordinate is (2,1) in the array, the X encoder value is 3268608 in decimal (corresponding to almost exactly 9mm position with 2 TPI rotary stage), Y encoder value is -1 in decimal, Z encoder value is -18 in decimal, CRISP error value is -895 in decimal, CRISP sum value is 1657 decimal, and the checksum is hex DF0F. To validate the checksum add each of these 16-bit unsigned numbers (excluding the 0D delimeters) which results in 5FFFA in hex. FFFA plus 5 is FFFF, and upon bitwise inversion the value becomes 0 as expected.

Without Any Argument

In firmware version 3.16 and above on TG-1000 and version 9.2k and above on MS2000/RM2000, when the TTL command is issued without any arguments, like [Card Addr#]TTL , the controller reports the state of TTL IN.

For Tiger/TG-1000, the controller replies with :A 0 when signal is low. and :A 1 when TTL IN sees a high signal.

For MS2000/RM2000, the controller replies with the inverse polarity, :A 1 when the signal is low and :A

0 when the signal is high. This is a logical bug in the firmware, but because it was in the field so long before being noticed we made the intentional decision to keep the behavior unchanged.

Command:UM

MS2000 or RM2000 syntax

Format	UM [axis]= ### ...
Units	Integer
Remembered	Using SS Z

Tiger syntax

Format	UM [axis]= ### ...
Units	Integer
Type	Axis-Specific
Remembered	Using [addr#]SS Z

Unit Multiplier

Specifies the multiplier for most serial commands such as MOVE and'' WHERE''. Default for stages is 10000, which means 10000 units per millimeter or 0.1 µm/count. For rotary stages and micro-mirror devices the UM is 1000 corresponding to milli-degrees.

The Unit Multiplier can be saved with the SS Z command.

Note: The sign of the Unit Multiplier can be used to change the relative direction of motion for commanded moves, but using the CCA Z command is the recommended way to change the stage direction.

Reply

If there are no errors, a positive reply of :A is returned.

For Clocked Position Devices

UM command has no effect if the axis is a Clocked Device like Filter Slider, Objective slider or Objective Turret.

Example

```
UM X=10000
:A
UM X?
X=10000.000000 A
```

As of Firmware version `9.2l` (for MS-2000) and `3.18` (for Tiger), when `UM` for a clocked Device is set to “1”, the WHERE (W) command prints the Axis position in millimeters instead of the slot position. The `MOVE (M)` command continues to work, while `MOVREL (R)` doesn't. This feature is meant for troubleshooting and diagnostic usage only and not meant for regular operation.

Command:UNITS (UN)

Shortcut	UN
Format	UNITS
Remembered	Using SS Z

Toggles between millimeters and inches shown on the LCD display when DIP Switch 2 is down.

Reply

If there are no errors, a positive reply of :A is returned.

Unit Multiplier

To change the Unit Multiplier use the Command:UM command.

Command:UNLOCK (UL)

For CRISP or ZS

Tiger Syntax

Shortcut	UL
Format	[Addr#]UL [X=LED_intensity] [Y=update_rate] [Z=rel_lk_knob_spd][F=focus_index]
Type	Card-Addressed
Remembered	Using [Addr#]SS Z

MS2000 and RM2000 Syntax

Shortcut	UL
Format	UL [X=LED_intensity] [Y=update_rate] [Z=rel_lk_knob_spd][F=focus_index]
Remembered	Using SS Z

Without arguments, this command unlocks the servo from the focus system and returns control to encoder feedback from the Z-axis drive. The focus error offset is not changed.

X: [LED_intensity] may be set from 0 to 100 (%) of full power using the X argument. The default value is 50.

Y: [update_rate] is used to reduce the update rate of the CRISP system to the motor drive system. Increase Update_Rate to improve stability when using piezo Z-axis drive systems. As of Tiger firmware version 3.38, the value of Update_Rate is given in milliseconds. The default update rate for piezos is 5ms and everything else has an update rate of 10ms as of version 3.38. Note: UL Y was previously known as "Number of Skips". You will want to increase the loop gain with LR T=# as you increase the update rate.

Z: [rel_lk_knob_spd] controls the sensitivity of the control focus knob when the system is locked. This will vary depending on the calibration factor that the system finds, so don't be alarmed if you find large sensitivity differences with conditions. The default value is 2.

F: [focus_index] To select active Z-focus axis: If the controller can handle more than one Z-axis focus device, you can specify the focus_index to select which one is active for the CRISP, TRACKING or ZS functions. Specify as a 0-indexed number; find the axis index from the letter using the Z2B command or else parse the output of the BU X command and figure out what number in order the axis letter is). Save the parameter change (SS Z) and reset the controller for setting to take effect.

CRISP: setting the focus_index will also modify lock range (LR Z), cal range (LR F), and loop gain (LR T). Lock range is set to 1 mm, cal range to 3.5 um, and loop gain to 10.

For TRACKING

Shortcut	UL
Format	UL [X=focus_enable] [Y= z_cal_value] [Z=closeness] [F=focus_index]
Remembered	Using SS Z

Without arguments, this command unlocks the servo from the focus system and returns control to encoder feedback from the Z-axis drive. The focus error offset is not changed.

X: [focus_enable] X=0 autofocus off; X=1 autofocus on.

Y: [z_cal_value] is the gain constant for the focus servo.

Z: [closeness] is a relative value describing the precision of XY centering before Z focus tracking is activated. closeness should be set to roughly the acceptable xerr2 + yerr2, where xerr and yerr are typical "well tracked" errors numbers seen on the controller LCD display.

F: [focus_index] To select active Z-focus axis: If the controller can handle more than one Z-axis focus device, you can specify the focus_index to select which one is active for the CRISP, TRACKING or ZS functions. Save the parameter change (SS Z) and reset the controller for setting to fully take effect. Some functions will work without the reset, including the command ZS X.

Command:VB

This command has a slightly different usage on Tiger then in MS2000 and RM2000.

MS2000 or RM2000 syntax and function

Shortcut	VB
Format	VB [X=binary_code] [Y=TTL IN1 state (read only)] [Z=read_decimal_places] [T=CMD_code]
Units	Integer
Remembered	Using SS Z
Firmware Required	v8.5+

Adds serial communication verbose modes for special functions. The `binary_code` is the sum of the bit values for the desired functions from the list below. The Y argument allows the TTL `IN1` input state to be directly queried via serial command. The number of decimal places for the `WHERE` command is set by `read_decimal_places`.

Bit 0	1	Send character ‘N’ upon completion of a commanded move.
Bit 1	2	Send ‘p’ for joystick quick-press and release, ‘P’ for long-press.
Bit 2	4	Send ‘H’ for TTL IN1 low-to-high transition; ‘L’ for high-to-low.
Bit 3	8	Changes the reply termination for'' <CR>+<LF>'' to just'' <CR>''
Bit 4	16	Move and Move Rel will print the new Target Position.
Bit 5	32	Axes positions reported upon completion of a commanded move.

Example VB X=7 turns on the first three of the above functions.

No Change Settings

`CMD_code` can be specified on firmware with the `NO_CHANGE_SETTINGS` module included in the firmware. If you need this function and do not have the module in the firmware, contact ASI. This feature allows some commands to be “turned off” for modification of settings by host software, preventing changes to those settings until the protection is explicitly removed.

Serial commands are enumerated according to the following table with a command number CMD:

No Changes Settings - Command Table

AA, AALIGN	0	PC, PCROS	20	MC, MOTCTRL	40	MA, MAINTAIN	60	LCD	80
AC, ACCEL	1	RM, RBMODE	21	PD, PEDAL	41	Z2B	61	WD, WRDAC	81
B, BACKLASH	2	RB, RDSBYTE	22	AF, AFOCUS	42	AM, AFMOVE	62	AR, ARRAY	82
BE, BENABLE	3	RS, RDSTAT	23	WT, WAIT	43	BU, BUILD	63	AH, AHOME	83
CD, CDATE	4	~, RESET	24	AZ, AZERO	44	LL, LLADR	64	AIJ	84
C, CNTS	5	SL, SETLOW	25	SS, SAVESET	45	AL, AFLIM	65	AFINFO	85
CR, CREST,	6	SU, SETUP	26	SN, SCAN	46	RU, RUNAWAY	66	EXTRA	86
D, DACK	7	S, SPEED	27	LK, LOCK	47	UM	67	PZ	87

E, ERROR	8	@, SPIN	28	UN, UNITS	48	ZS	68	PZC	88
\, HALT	9	/, STATUS	29	MT, MTIME	49	HM, SETHOME	69	PZINFO	89
TTL	10	V, VERSION	30	VE, VECTOR	50	OS	70	ARM	90
H, HERE	11	W, WHERE	31	KA	51	CCA, CUSTOMA	71	BCA,BCUSTOM	95
!, HOME	12	N, WHO	32	RDADC	52	CCB, CUSTOMB	72	LED	96
J, JOYSTICK	13	Z, ZERO	33	NR, SCANR	53	TEST	73	SECURE	97
KD	14	JS, JSSPD	34	NV, SCANV	54	EP, EPOL	74	MM, MULTIMV	98
KI	15	ES, ENSYNC	35	UL, UNLOCK	55	RT, RTIME	75	TSLOCK	99
KP	16	I, INFO	36	RL, RELOCK	56	AFADJ	76	SAA	100
KV	17	SP, SAVEPOS	37	LR, LOCKRG	57	AFC, AFCALIB	77	SAM	101
M, MOVE	18	LD, LOAD	38	SB, STOPBITS	58	AFHOLD	78	SAP	102
R, MOVREL	19	DU, DUMP	39	VB, VBMODE	59	SI	79	SAF	103
								SAO	104

To disable the write function of a command, use VB T=(1000+CMD).

Example VB T=1027 will disable changing the SPEED command.

The command is explicitly enabled by using VB T=CMD.

Example VB T=27 will allow the SPEED command to work again.

Tiger syntax and function

Shortcut	VB
Format	[addr#]VB [X=binary_code] [Z=read_decimal_places] [F=###]
Units	Integer
Type	Card-Addressed
Remembered	Using [addr#]SS Z

The **Z** argument sets the number of decimal places for the WHERE command. This is card-addressed so that different cards can be set differently. It is saved to non-volatile memory using the SS Z command.

The **F** argument sets the reply syntax; this command is only applicable to the comm card. The default setting of 0 is the MS-2000 syntax, and setting to 1 gives the Tiger syntax (see Reply Syntax section of Quick Start on Serial Commands. The syntax state does not persist when power is turned off because the comm card has no saved settings (it could potentially in the future, but not as of mid-2022).
**Reply ** Note that this command does NOT return :A or other acknowledgement.

The **X** argument implemented in firmware version 3.17 and above. When set with the Binary bit shown in the table below, performs the corresponding action

Bit 4	16	Move and Move Rel will print the new Target Position.Vector command will print the current position

```
1vb x=16

<LF>
ve x=1 y=-1
```

```
:A -0 -0
<LF>
ve x=2 y=-2
:A 66562 -66567
<LF>
ve x=0 y=0
:A 156651 -156663
<LF>
```

In the above example, XY stage is on Card Addr#1. Because VB X=16, BIT4 was set. This makes the Vector command reply with the axis's current position.

Command:VECTOR (VE)

MS2000 or RM2000 syntax

Shortcut	VE
Format	VE [axis]=[speed in mm/sec]...
Units	mm/sec

Tiger syntax

Shortcut	VE
Format	VE [axis]=[speed in mm/sec]...
Units	mm/sec
Type	Axis-Specific

The VECTOR command causes the stage to immediately ramp up to the velocity value specified by the command. The command arguments are expressed in units of mm/sec. The stage will continue indefinitely at the commanded velocity until the controller receives another command. A value of zero for the velocity component will halt motion on that axis. The controller will accelerate the stage to the commanded velocity at the rate specified by the ACCEL and SPEED commands until the commanded velocity is obtained.

Query

VE X? [Y?] [Z?] Returns the current speed increment for the servo trajectory generator in units of mm/sec.

Reply

:A is returned upon receipt of the command.

Example

```
ve x=10
:A
<LF>
```

```
ve x?
:A X=9.999151
<LF>
ve x=0
:A
<LF>
```

- Command:MOVE (M)
- Command:MOVREL (R)
- Command:SPIN (@)
- Command:VECTOR (VE)

Command:VERSION (V)

MS2000 or RM2000 syntax

Shortcut	V
Format	VERSION [T]

Tiger syntax

Shortcut	V
Format	[addr#]VERSION
Type	Card-Addressed

This commands returns the current firmware version.

Note: The MS-2000 firmware version no longer contains a character at end, the firmware version after `9.2p` is `9.50`.

Tiger Example

Firmware version of the card at address 1:

```
1V
:A v3.45
```

MS2000 example

Firmware version of the controller:

```
V
:A Version: USB-9.2m
```

Note: New firmware versions no longer contain a character at the end.

```
V
:A Version: USB-9.52
```

The T parameter outputs the version in Tiger format: *MS-2000 firmware 9.54 or above is*

required.

```
V T
:A v9.54
```

This can be useful for software that wants to reuse version parsing and comparison code for both controllers.

Command:WAIT (WT)

MS2000 or RM2000 syntax

Shortcut	WT
Format	WAIT [axis]=[time in ms]...
Units	Milliseconds
Remembered	Using SS Z

Tiger syntax

Shortcut	WT
Format	WAIT [axis]=[time in ms]...
Units	Milliseconds
Type	Axis-Specific
Remembered	Using [addr#]SS Z

Sets the length of time in milliseconds that the controller will pause at the end of a commanded move. The busy status is not cleared during this pause state, unless the ''MAINTAIN'' behavior for the axis is set to code=3. Additionally, a **P** is displayed on the LCD display when in the Pause state. During the Pause state, the servo loop actively attempts to position the axis on target.

For a piezo stage axis, the controller enters the Pause state as soon as the command is received and the voltage applied to the piezo. The controller remains BUSY until the Pause state times out. Typically used to allow for piezo stage settling time.

For Phototargeting or builds with the MM_TARGET firmware module, this can be used to specify the amount of time between the move initiation (either a ring buffer move or from the AIJ command) and when the laser pulse turns on. Thus it would normally be non-zero for at least one of the micro-mirror axes involved in phototargeting. Default for all axes in'' MM_TARGET'' firmware is 5 ms (usual default is 0 ms).

Example

```
WT X?
:X=0 A
WT X=20
:A
```

Sets the wait time for the X-axis to 20 ms.

Command:WHERE (W)

MS2000 or RM2000 syntax

Shortcut	W
Format	WHERE axis [axis] [axis]...

Tiger syntax

Shortcut	W
Format	WHERE axis [axis] [axis]...
Type	Axis-Specific

Returns the current position of the device for the axis specified.

The reporting precision of the WHERE command can be changed with the VB Z command.

Reply

If there are no errors, a positive reply of :A will be followed by the current position, in tenths of microns.

Example

```
W X Y Z
:A 1234.5  432.1 0
```

In this example, **X** is 123.45 microns from the origin, **Y** is 43.21 microns from the origin, and **Z** is sitting on the origin.

Notes:No matter which order the X, Y, and Z's are specified in the WHERE command, the reply will always be in the order of the underlying hardware. Hence, the ordering of the responses does not necessarily follow the order of the query or alphabetical order. The order of the underlying hardware is first by card address (for Tiger only) and then by the ordering of the electronics on each card. The ordering of underlying hardware can be determined by using the Z2B query and also found in the output of the BU X command in the line beginning with "Motor Axes:".

Command:WHO (N)

MS2000 or RM2000 syntax

Shortcut	N
Format	WHO

Tiger syntax

Shortcut	N
Format	WHO
Type	Comm-default command

Inquires the controller to reply with its name. Allows computer software to automatically determine what stage instrument is attached at the end of the serial line.

In TG-1000 it prints all the card address, axis characters, build name and compile date, of all cards installed in the system. The card addresses are printed in the hex representation of the character, e.g. “32” is printed for card address “2”.

MS2000 example

```
N
:A ASI-MS2000-XYFR-Z1R-USB
```

Tiger example

```
N
At 30: Comm v3.45 TIGER_COMM Apr 04 2024:17:51:59<CR>
At 32: Z:ZMotor,F:ZMotor v3.54 SCAN_ZF_ENC2 Mar 24 2026:16:14:54
[S]<CR>
At 39: A:MMirror,B:MMirror,C:MMirror,D:MMirror v3.51 GALVO_SPIM Dec 18
```

Command:WRDAC (WD)

On Tiger with TGLED

Shortcut	WD *requires v3.51 (Tiger Comm)*
Format	[Addr#]WRDAC X=[1 to 100]
Units	Percentage between 0 and 100
Type	Card-Addressed
Remembered	Using [Addr#]SS Z

This command is “recycled” for a slightly different use in TGLED than for other cards. In the context of a TGLED card this command is used to set the maximum amount of current for all the

LED channels.

The Maximum amount of current a TGLED Rev A card can output on each LED channel is 1.2Amps. When the X argument is set to 75, then maximum current each channel will output is reduced to 75% of 1.2Amps i.e. 0.9Amps.

This command can be used as a quick way to adjust the brightness of all LED channels. Default is 75%, ASI recommends not exceeding this limit.

Example

```
1WRDAC X=50
:A
```

Limits the maximum current output on each channel to 50% or 0.6Amps

```
1WRDAC X?
X=50 :A
```

Queries the card for maximum current percentage.

On Tiger with TGPMT

Shortcut	WD *requires v3.51 (Tiger Comm)*
Format	[Addr#]WRDAC X=[0 to 1000] Y=[1 to 1000]
Units	integer, between 0 and 1000
Type	Card-Addressed
Remembered	Using [Addr#]SS Z

This command is “recycled” for a slightly different use on TGPMT card than for other cards. In the context of a TGPMT card this command is used to set the PMT's control voltage or gain. When set to 0, PMT output signal drops to 0Volts, turning it off. When set to 1000, 100% of control signal (1 Volts incase of H10722) is applied to the PMT.

X sets the gain for PMT0

Y sets the gain for PMT1

This function does the same function as the Dials on TGPMT cards faceplate.

Example

```
7WRDAC X? Y?
X=500.000000 Y=0.000000 :A
```

Queries the TGPMT card at Address 7 for PMT gain settings. PMT0 is at 50% gain, PMT1 is at 0% gain and so is off.

```
7WRDAC X=505
:A
```

Sets the gain of PMT0 at 50.5% on TGPMT card at address 7.

On MS2000 and RM2000

Shortcut	WD *requires v9.53*
Format	WRDAC X=[0 to 10]
Units	Voltage, 0 to 10V
Firmware Required	8.4f+, Not containing “PZ”

Lets the user set the voltage on header pin SV1-5 on WK2000 board. The voltage can be varied between 0 and 10 Volts, with an accuracy of 0.1V. Maximum Output drive current is 35mA. Input value in volts.

This command is completely disabled on piezo controllers. If using a a firmware build with “PZ” in the name, such as PZ_CRISP, normal commanded moves of the Z axis will be scaled using the CCA X command. The CCA X command should only be set once to specify the maximum travel range of the piezo being used. This scaling will map the piezo physical range in normal units of 1/10um (centered around 0) to voltage on the analog 0-10V (minimum=0v, maximum=10.00v) output BNC (SV1 Pin 5).

Example

```
WRDAC X=1.1
:A
```

Voltage on PIN SV1-5 is 1.1Volts

```
WRDAC X=20
:N-4
WRDAC X=-1
:N-4
```

Parameter out of range

Command:Z2B

MS2000 or RM2000 syntax

Format	Z2B axis=[new axis letter ascii code]...
Units	ASCII code
Remembered	Using SS Z
Firmware Required	v8.6d+

Tiger syntax

Format	Z2B axis=[new axis letter ascii code]...
Units	ASCII code

Type	Axis-Specific
Remembered	Using [addr#]SS Z

Allows the user to change the axis name for a motor axis. The `current_axis_letter` must be one of the motor axes names listed with the BU X command. The `new_axis_letter_ascii_code` must be the decimal ASCII code for the desired axis name for letters between upper case `A(65)` and'' Z(90)''. For the change to take effect, the new setting must be saved to flash memory using SS Z, followed by a hardware reset. The new axis name will remain in effect unless default settings are restored to the controller.

If the Z2B value of an axis is queried (e.g. Z2B Y?), the axis' index on the card is returned (e.g. :A Y=1 for the 2nd axis on the card).

Reply

If there are no errors, a positive response of :A will be returned from the controller.

Example

```
Z2B  Z=66
:A
```

change to **B** axis name

```
2SS  Z
:A
```

Required to save new name setting to flash. 2 because Z is at card address 2.

Command:ZERO (Z)

MS2000 or RM2000 syntax

Shortcut	Z
Format	ZERO

Tiger syntax

Shortcut	Z
Format	ZERO
Type	Broadcast Command

Writes a zero to the position buffer of **all** axes. Allows the user to set current position as the origin. It's a Broadcast Command.

For setting the position of a single axis to zero instead, use the HERE command.

Reply

If there are no errors, a positive response of :A will be returned.

Note

This command has no effect on clocked devices

Example

```
Z
:A
```

After the reply, the indicators on the LCD should all be zeros.

Command:ZS

MS2000 or RM2000 syntax

Shortcut	ZS
Format	ZS [X=dZ] [Y=num_slices] [Z=mode] [F=stack_timeout] [M=stack_state] [T?]
Remembered	Using SS Z

Tiger syntax

Shortcut	ZS
Format	[addr#]ZS [X=dZ] [Y=num_slices] [Z=mode] [F=stack_timeout] [M=stack_state] [T?]
Type	Card-Addressed
Remembered	Using [addr#]SS Z

Required Firmware Modules:

- `IN0_INTERRUPT` (need to use TTL X=4 for Z-stacks)

Incompatible Firmware Modules:

- `TTL_REPORT_INT`

Parameters:

X **[dZ]:** The amount to move each slice in 10ths of microns (ASI units). For example, the default value of the units multiplier is `UM Z=10000`, so `ZS X=50` is 5 microns per step.

If the unit multiplier has been changed with the UM command you will have to adjust the value that you use for dZ. For example, if `UM Z=1000000` then `ZS X=5000` is 5 microns per step.

Y **[num_slices]:** The number of slices in the Z-stack, the maximum value is 32767. Prior to MS2000 v9.50 and Tiger v3.43 the maximum number of slices is 127.

Z **[mode]:** Select between a sawtooth or triangle waveform for stage motion for repeated stacks. The default mode is the sawtooth waveform, i.e. repeating stacks always in the same direction.

ZStack Mode	
0	Sawtooth waveform
1	Triangle waveform

F **[stack_timeout]:** The maximum amount of time in milliseconds between TTL input pulses. The stage will return to the starting position of the Z-stack after `stack_timeout` ms has elapsed without a TTL input trigger.

The default `stack_timeout` is 500, and the max value is 32767.

MS-2000 v9.55 or Tiger v3.53 required
T **[stack_index]:** Read the current `stack_index` with `ZS T?`, the index starts at `0` and goes up to `num_slices-1`.

MS-2000 v9.55 or Tiger v3.54 required
M **[stack_state]:** Read the current stack state as an integer. The Z-stack is active if the return code is not 0.

Sending `ZS M=0` exits the Z-stack and returns to the initial position. This is the only valid state to send to `ZS M=#`.

ZStack State		
Code	**State**	**Notes**
0	START	Idle
1	UP	Active
2	DOWN	Active (Triangle waveform only)

Command Description:

This command sets parameters for use with TTL triggered Z movement. User must also set TTL X=4 for this trigger mode to be active. When a positive TTL edge is detected, the focus axis is moved by an amount dZ (expressed in 10ths of microns). Note that internally the amount dZ is actually stored as a multiple of the encoder unit, e.g. ~22 nanometers for a 4 TPI stage with rotary encoders, or 10 nanometers exactly for most linear encoded stages. This move distance is repeated for `num_slices` TTL triggered moves. If `mode=1`, the stage will step in the opposite direction for n moves, then turn around again, repeating a triangular waveform cycle. If `mode=0` the stage will return to the original position after `num_slices` moves and repeat a saw-tooth waveform cycle.

The current position when the first TTL pulse is received becomes the center of the stack as well as the position that the stage returns to after the timeout duration.

The stack begins with a move to the negative extreme if dZ is positive and moves in increasing position. To reverse the polarity use a negative dZ.

Note that the total range traversed during the stack is `dZ*(num_slices-1)`.

Changing The Axis Under Control:

The axis moved by the TTL is the designated “focus index” (also the axis used for CRISP among other things). Use UNLOCK F (UL F) to read or set the axis letter corresponding to “focus index”. Note the setting has to be changed, settings saved, and the controller reset or power cycled for the new setting to take effect. If the controller has a piezo but no motorized focus drive then the piezo axis should be set as the “focus index”. If both are present the “focus index” normally defaults to the piezo. Prior to Tiger v3.44 the ZS command would always move the `z index` rather than the `focus index`.

This is not the only way to perform a Z-stack using ASI hardware, the ring buffer module can be setup to do Z-stacks as well.

Backlash: The Z-stack routine also performs the backlash compensation move for each step. For step size smaller than 10 microns, this might result in issues like irregular step sizes. Consider disabling BACKLASH (B) for smaller step sizes.

Stack Timeout: If the TTL frequency is less than 2Hz, then the controller might consider it a stack time out condition. Consider increasing the stack timeout to accommodate the slower TTL frequency, to avoid any issues.

Reply

If there are no errors, a positive reply of :A will be returned. Example

Example

Setup to do twenty 1 micron slices with triangular pattern.

Tiger Example

The focus drive axis is at card address 2

```
2ZS X=10 Y=20 Z=1
:A
```

MS2000 Example

```
ZS X=10 Y=20 Z=1
:A
```

Examples of expected behavior:

Graphs of the Z position data

The center of the Z-stack is 0 in the following graphs.

Sawtooth Waveform

Use an odd `num_slices` if you want the center point to be on the starting position.

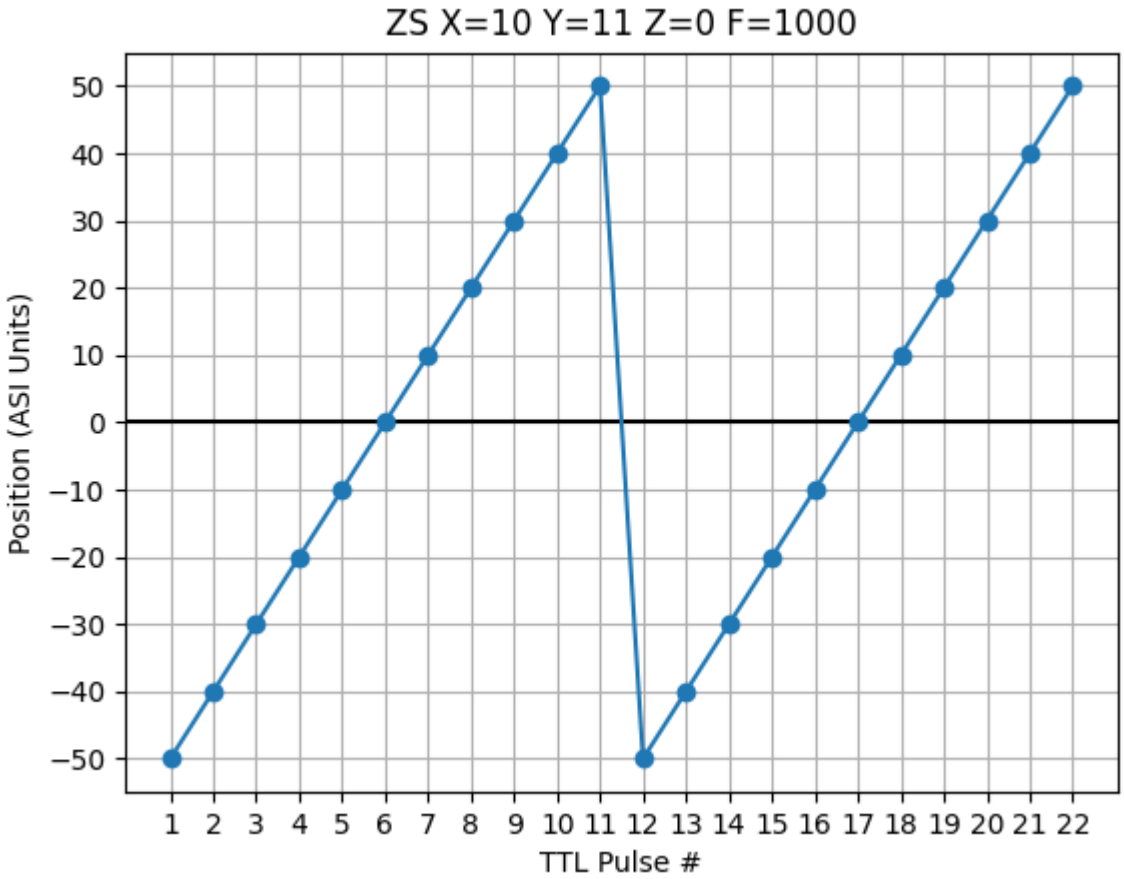

An even `num_slices` is symmetrical around the starting position.

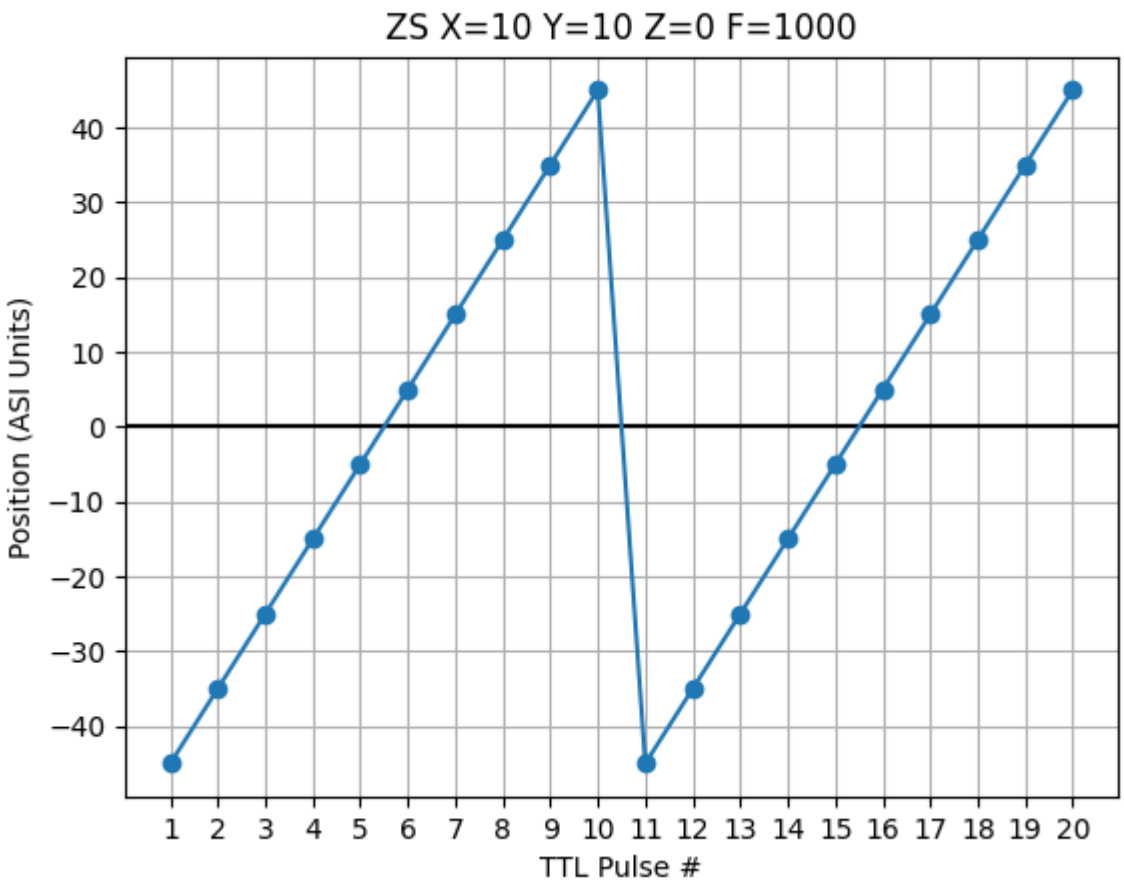

Triangle Waveform

The triangle waveform swaps starting positions every Z-stack.

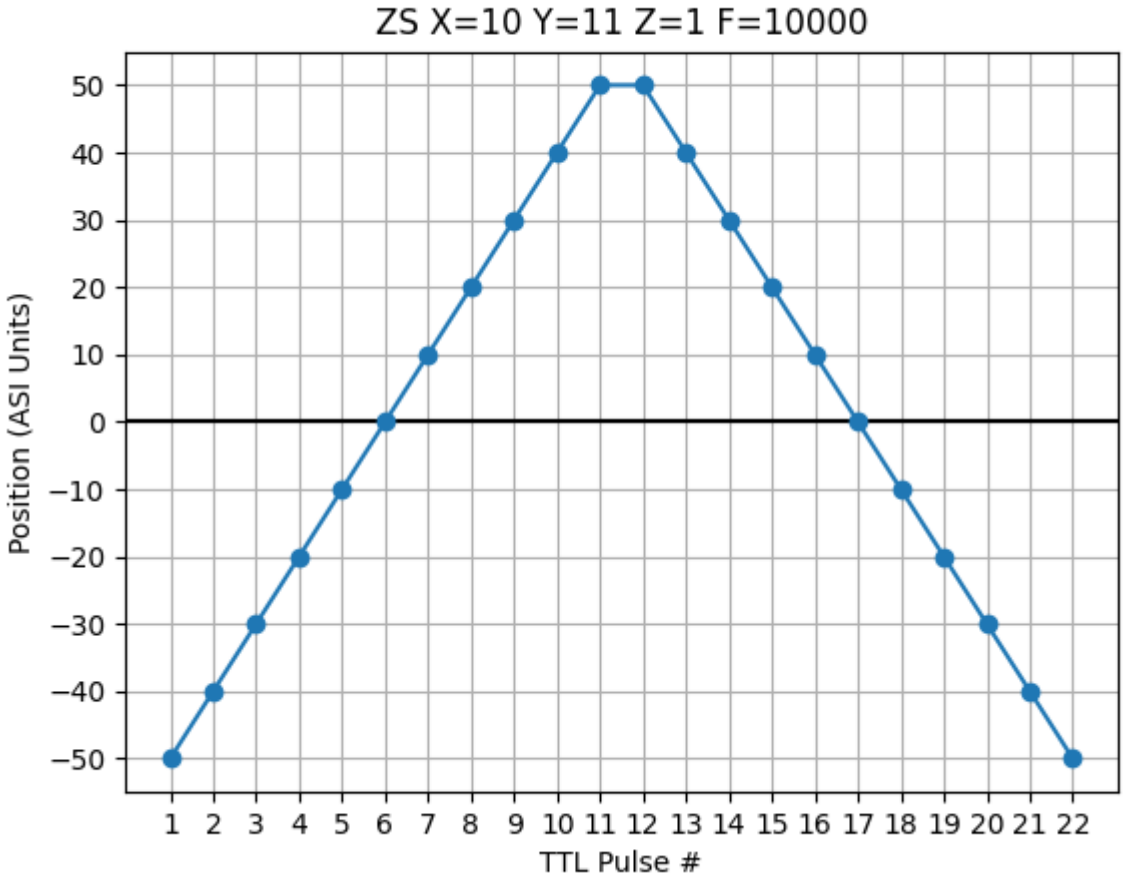
ZS X=10 Y=11 Z=1 F=10000
Position (ASI Units)
50
40
30
20
10
0
−10
−20
−30
−40
−50
1 2 3 4 5 6 7 8 9 10 11 12 13 14 15 16 17 18 19 20 21 22
TTL Pulse #

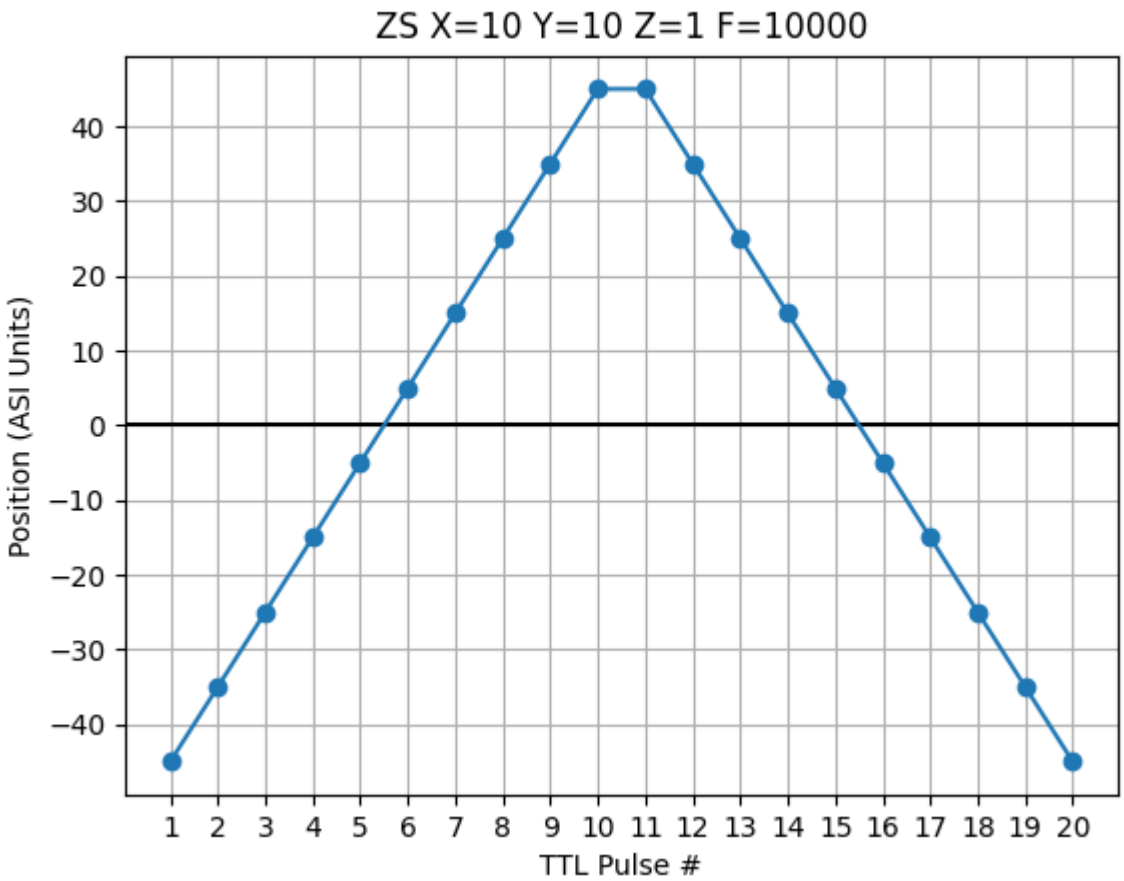
ZS X=10 Y=10 Z=1 F=10000
Position (ASI Units)
40
30
20
10
0
−10
−20
−30
−40
1 2 3 4 5 6 7 8 9 10 11 12 13 14 15 16 17 18 19 20
TTL Pulse #

Version History

Version		
MS	**TG**	**Description**
9.55	3.53	add ZS T? to read the stack index
9.54	3.53	fixed triangle waveform behavior
9.54	3.52	odd num_slices regression from (9.51, 3.45) fixed
9.51	3.45	even num_slices are symmetric around start position
9.50	3.43	max num_slices increased from 127 to 32767
9.2j	3.44	move the focus_index instead of z_index

Quick Start on Serial Commands

This section is intended to quickly bring the users up to speed on the most common serial commands. Find separately an index of all commands and a compiled list of commands; separate documentation for each command are linked there.

There is a separate page detailing the communication details (also includes notes on various software that can be used to send serial commands directly or indirectly including Python, Julia, Micro-Manager, LabView, etc). Serial commands are not case-sensitive. For commands that require a numeric input, if none is specified then the value is taken to be 0.

The most common commands are identical across both the MS-2000/RM-2000 controller and the TG-1000 “Tiger” controller. Any “axis-specific” commands that specifies a physical axis that the command applies to will be identical (e.g. M, R, W for absolute and relative moves along with position query) along with the busy query /. Commands that use a letter to specify what the setting is (e.g. TTL X sets TTL input mode and TTL Y sets TTL output mode) are slightly different on Tiger in that the card address must be prepended. There is a full description of TG-1000 and MS-2000’s instruction set differences.

Note that ASI filter wheels have a completely separate command set described in the filter wheel documentation, along with a different serial terminator. Also see the documentation for TG-1000 filter wheel communication.

Most common commands

Full name	Short name	Use	Default units	Specify axis or address?	Example
MOVE	**M**	Initiates move to absolute position	10ths of microns	Axis	M X=10000 moves to position 1.000 mm per current origin
MOVREL	**R**	Initiates move a specified distance from current position	10ths of microns	Axis	R X=-1000 moves 100um in negative direction

Full name	Short name	Use	Default units	Specify axis or address?	Example
HALT	****	Stops all active motors and actuators	-	Broadcast; TG-1000 card address allowed, but only with the full HALT	\ halts motion; follow with /, which returns N once all axes have stopped
WHERE	**W**	Queries the absolute position of the axis	10ths of microns	Axis	W X returns :A 1000 if the absolute position is 100um relative to the origin
HERE	**H**	Redefines the current position of the axis without moving it	10ths of microns	Axis	H X=1000 declares the current position of X to be 100 um; H X sets it to 0
ZERO	**Z**	Makes the current position the origin for all axes	-	Broadcast	Z zeroes every axis; use HERE to zero one axis
STATUS	**/**	Queries status of all axes on controller (MS-2000) or on card (TG-1000 if address is specified)	-	Address optionally (TG-1000 only)	/ returns N if no axis is busy or B if at least one axis is busy
RDSTAT	**RS**	When used with ? qualifier, queries status of the specified axis	-	Axis	RS X? returns N if the X axis is not busy or B if busy

Command Syntax

The controller's instruction set is implemented using the following general syntax. Details are given on the page of each command.

```
<command name> (<axis letter> [=<value>] | [?] | [+] | [-])* <Carriage Return>
```

The COMMAND is a string of ASCII characters such as MOVE or HOME, which must be followed by a space. All commands are case insensitive. Most commands have abbreviated names that help cut down on typing time and serial bus traffic.

Next comes one or more sets of strings that contain an axis name. When setting a value the axis name is followed immediately by an equal sign and the corresponding value. Decimal values are expressed in the US/UK convention with a period symbol '.' for the decimal point, and without any commas ',' or other delimeters. Each axis must be separated from the one before by one blank space. One or more axes may be specified on a single command string, but note that the order of processing (and reply) is done is a controller-defined (and reproducible) order instead of in the order in the command string.

The usual syntax is to set parameter values with an equal sign, and query them using a question mark. However note that there are separate commands for setting and querying stage positions.

When a numeric value is expected but omitted then it usually is interpreted as =0; the behavior is near-universal and works for the commonly-used MOVE, MOVREL, and HERE commands. Truncation or

rounding of numeric values may occur depending on the command.

Some commands do not require a parameter value (e.g., `INFO X`) or use the + or - signs (e.g. `MC X-`).

The axis name is a single character. All 26 alphabet characters A-Z can potentially be used as axis names, and the special character * means “all axes” (not including filterwheels) in recent Tiger firmware. Axis letters X and Y are typically used for a 2-axis motorized stage, Z and F are commonly used for focus axes, and `A-D` are the default letters for micro-mirror scanner axes. Filter Wheels are designated by numbers, TG-1000 can accommodate up to 10 wheels numbered 0-9.

For Tiger only: When `[Addr#]` appears in the format, then the intended card address must be prepended to the serial command, as the command is Card-Addressed. **…** indicates more arguments can be sent with the same command.

All commands are completed with a Carriage Return (ASCII hex code: `0D`). The controllers receive ASCII characters one at a time and place them into their memory buffer. With the exception of single hex code commands like the tilde ~ and halt \, the controller will not process a command in the memory buffer until the Carriage Return <CR> has been received.

Reply Syntax

Upon receiving a Carriage Return <CR>, the Controller will process the command stored in its command buffer, clear the command buffer, and return a reply.

MS-2000 Reply Syntax

When a command is recognized, the controller will send back a colon `:` (hex code: 3A) to show that it is processing the command. When processing of the command is complete, an answer is returned with any requested information, typically beginning with the letter A. In some cases, the answer part of the reply is delayed until the completion of the command. The reply is terminated by a carriage return and a linefeed character <CR><LF>. In the examples below, the <CR> and <CR> <LF> are implied. This programming manual gives examples in the MS-2000 reply syntax unless otherwise specified.

Examples

```
Typed commands are in THIS TYPEFACE
Controller replies are in THIS TYPEFACE
```

```
MOVE X=1234 Z=1234.5 <CR>
:A <CR><LF>
MOVE X Y Z <CR>
:A <CR><LF>
WHERE X <CR>
:A 0 <CR><LF>
MOVE X=4 Y=3 Z=1.5 <CR>
```

```
:A <CR><LF>
WHERE X Y Z <CR>
:A 4 3 1.5 <CR><LF>
WHERE Z Y X <CR>
:A 4 3 1.5 <CR><LF>
```

Tiger Reply Syntax

The TG-1000 has two reply syntaxes; the active one is set using the VB F command. The default syntax is backwards compatible with the MS-2000 controller, including all the quirks and inconsistencies between commands. The Tiger syntax is more self-consistent and in some cases more explanatory (e.g. with `WHERE`), but is not backwards compatible. Choice of reply syntax is completely arbitrary and does not affect operation.

In the Tiger syntax no :A is sent back. Furthermore, whenever an axis position or command value is returned (i.e. whenever the command is a query), the axis letter is always specified. Consequently, when no information needs to be sent back and there is no error the controller simply replies with <CR><LF> only.

The above examples in Tiger reply syntax are as follows:

```
MOVE X=1234 Z=1234.5 <CR>
<CR><LF>
MOVE X Y Z <CR>
<CR><LF>
WHERE X<CR>
X=0 <CR><LF>
MOVE X=4 Y=3 Z=1.5 <CR>
<CR><LF>
WHERE X Y Z <CR>
X=4 Y=3 Z=1.5 <CR><LF>
WHERE Z Y X <CR>
X=4 Y=3 Z=1.5 <CR><LF>
```

Query of Parameters

Most commands used to set parameter values – for example the setting S for maximum speed or B for backlash move distance – can be queried for the current values using the question-mark syntax: CMND X? Y? Z? F?. The controller will respond with CMND's current settings, e.g. :A X=0 Y=1 Z=10 F=2. The exact details of the reply syntax depend on the exact command but are self-evident when you try it.

This feature is most useful when using a terminal program to change controller parameters to verify that you have made the changes that you think you did, or to check present settings.

Note that the position query `W` is a command by itself and does not use the question-mark syntax; simply use `W <axis>`.

Command Syntax Error Codes

When a command is received that the controller cannot interpret, for one reason or another, an error is returned in the following format:

```
:N-<error code>
```

The error codes are as follows:

Command Syntax Error Codes	
:N-1	Unknown Command *(not issued in TG-1000)*
:N-2	Unrecognized Axis Parameter *(valid axes are dependent on the controller)*
:N-3	Missing Parameters *(command received requires an axis parameter such as x=1234)*
:N-4	Parameter Out of Range
:N-5	Operation Failed
:N-6	Undefined Error *(command is incorrect, but for none of the above reasons)*
:N-7	Invalid Card Address
:N-8 … :N-10	Reserved
:N-11 … :N-20	Reserved For Filterwheel
:N-21	Serial Command Halted *(by the HALT command)*
:N-30 … :N-39	Reserved

A Note Regarding Units

The most common commands including `MOVE`, `MOVREL`, `HERE`, and `WHERE` use axis units, which can be changed using the `UM` command.

By default, axis units are: - for distance (e.g. for motorized stages and piezo stages): each unit is 0.1um, or 10,000 units per millimeter of travel - for angle (e.g. rotary stages): each unit 0.001 degrees or 1000 units per degree of travel - for micro-mirrors: each unit is 0.001 degrees or 1000 units per degree (uncalibrated)

Note that some commands including `SETUP`, `SETLOW`, and `PCROS` use distance units of millimeter (mm), and the documentation page for the command specifies the unit.

To specify times including the `AC`, `WAIT`, `SAF` and similar commands the unit is generally milliseconds but occasionally seconds as described in the per-command documentation.

A few commands use integer codes or other input units as described in the per-command documentation.

TG-1000 and MS-2000's Instruction Set

Differences

This section is intended to quickly bring the users up to speed on the major differences in the serial commands between TG-1000 and MS-2000 controller.

Where possible the TG-1000 commands were kept close to the MS-2000 controller commands. The most common commands are identical because they are Axis-Specific commands. A special Tiger reply syntax was added to Tiger starting in COMM card firmware v1.92. However the default syntax closely mirrors the MS-2000 syntax.

Categories of Commands

Axis-Specific Commands

Commands where the axis letter of the stage is specified work just like MS-2000 on the Tiger, e.g. `MOVE`, `MOVREL`, and `WHERE`. For example, X and Y axis reside on card with address 1, and Z resides on card with address 2. When `M X=## Y=### Z=###` is issued the COMM card in TG-1000 controller parses the command, and redirects each sub-command to the appropriate card automatically. These commands are called Axis-Specific Commands. A card address should not be specified with an Axis-Specific command, otherwise undefined behavior may result from any mismatch between the address specified and the card with the axis as determined by the COMM card.

Card-Addressed Commands

For the Tiger controller we were forced to alter handling of commands which do not contain the letter of a stage axis. In those cases, the user must specify which card the command is intended for, and the COMM card will relay the command appropriately. For example, in MS-2000 the `SS Z` command saves settings into non-volatile memory, but the user may not want all the settings on all the cards to be saved. For the TG-1000 the user has to prepend the card address to the command to make it work. For example, if the card that drives XY axis has the address 1, to only save setting on this card user should issue `1SS Z` (or equivalently `1 SS Z`). These commands are called Card-Addressed Commands. How to determine the address of a specific card is described below.

Importantly, for any settings selected by Card-Addressed Commands the setting applies to all axes on the card. For example, the ring buffer delay can be set independently for the XY stage on one card and a piezo stage on a different card. However, if a card contains more than one independent axis (e.g. a ZF card for two linear stages, or a Micro mirror card for 2 scanners) then the same setting applies to all axes. Continuing our example, the ring buffer on the ZF card would control both Z and F axes (though one of these axes could be disconnected from the ring buffer) so Z and F could not have separate ring buffer delay times.

Some commands default to a particular card if an address is not specified, though they can be addressed to specific cards as well. There are sub-categories of commands sent to the COMM card unless otherwise specified (e.g. `BUILD` and `WHO`), commands sent to whatever card has the X axis or else all the stage cards if the X axis doesn’t exist (e.g. `JSSPD` and `LED`), and commands sent to whatever card has the Z axis or all the stage cards if the Z axis doesn’t exist (e.g. most CRISP and

autofocus commands). These sub-categories may be referred to as Comm-Default, Stage-Default, and Focus-Default commands respectively.

Broadcast Commands

A third category is Broadcast commands, like STATUS, HALT, RESET, and ZERO. They are routed to all cards in a TG-1000 system by default, just like the MS-2000. However, in most cases they can also be directed at a single card by simply adding the card address, so they could be considered as special type of Card-Addressed Commands sent to all cards if an address is not specified.

Other differences

Note that a few commands have minor behavioral differences between MS-2000 and TG-1000. Most often these are due to hardware differences, e.g. different buttons or different TTL capabilities. Deviations between MS-2000 and TG-1000 command set are noted in the documentation of those commands. Note that TG-1000 offers a wide variety of different types of cards driving different devices.

Special "All-Axis" Letter

Beginning with COMM card firmware version 3.10 a special axis letter * was added to Tiger. When this character is specified in an Axis-specific command then it applies to all the axes in the controller. For instance, all axes can be moved to zero position using `M *=0` (or equivalently `M *` because numbers not specified default to 0) and all joystick settings can be cleared with `J *=0`. The * axis letter can also be combined with card addressing to apply the command to all the axes on the same card, e.g. `3M *=0` will move all axes on card address 3 to their zero position, and `3! *` will home all axes on card 3.

How does the user find out a card address?

When the TG-1000 is turned on or when WHO serial command is issued, the controller prints out card address, axis names, firmware version and firmware build date of all the cards installed in the system (see section Tiger Banner below for more details). Also, more complete information about the cards and corresponding axes can be accessed using the BUILD X command which is described in the section Build Command below.

As an illustrative example, the controller may have the following configuration as reported on startup:

```
.................................................................
At 30: Comm v1.5 TIGER_COMM May 07 2013:15:42:05
At 31: X:XYMotor,Y:XYMotor v2.4 STD_XY Jun 11 2013:17:00:12
At 32: Z:Piezo v2.4 ADEPT_PIEZO Jun 11 2013:17:05:00
Joystick ready.
System ready.
```

The card addresses are shown in ASCII code. `At 31` indicates a card with X and Y axes has the address 1 (ASCII code of 1 is 31).

To save settings in non volatile memory:	`1SS Z`	Card-Addressed
To print its error dump buffer:	`1DU Y`	Card-Addressed
To move X and Y axis:	`M X=### Y=###`	Axis-Specific

Similarly the card with Z axis has address 2 (ASCII code of 2 is 32).

To move Z axis:	`M Z=###`	Axis-Specific
To issue pzinfo command on this card:	`2PZINFO`	Card-Addressed
To put in closed loop external input mode:	`2PZ Z=1`	Card-Addressed
To save settings into non-volatile memory:	`2SS Z`	Card-Addressed
To run short calibration on the piezo:	`2PZC`	Card-Addressed

Addresses beyond 0-9

Comm card firmware prior to v3.42 only allows addresses '1' - '9' to be accessed, which is hex 0x31 - 0x39. Beginning with comm card firmware v3.42 you can use addresses '1' - '9' as well as addresses hex 0x81 - 0x86, which is as many cards as can fit into a single Tiger controller. (Note that controllers can be daisy-chained if required, and ASI can extend further the accessible range when a customer needs it.)

It can be tricky to interact with addresses 0x81 and above because the address is not an ASCII characters. If you can send the appropriate non-ASCII character through your control software, prepending card-addressed commands with that character, then nothing else is needed: the controller will correctly interpret those non-ASCII character as addresses. However, provision was added in comm card firmware v3.42 to allow easy access to this extended address space sending only ASCII characters: if you enter the back-tick character at the start of a command '`' then the next 2 characters are interpreted as hexadecimal values for the address. For example, to query the configuration of address '4' = 0x34 you can either issue `4 CCA X?` or you can equivalently send `` `34 CCA X? ``. For address 0x81 you can send `` `81 CCA X? ``.

Table 1 TG-1000 Addresses

Addressee	**Usage**	**Value**
TG-1000 Comm	Hard coded, re-assignable	0x30 (‘0’)
Stage/ FW/Shutter	Unique Address	0x31 to 0x39, then 0x81 to 0xF5
Stage Broadcast	Recognized by all stage controllers	0xF6
Filterwheel Broadcast	Recognized by all FW controllers	0xF7
Shutter Broadcast	Recognized by all shutter controllers	0xF8
LCD Broadcast	Recognized by all LCD controllers	0xF9
Broadcast	Recognized by all cards	0xFD
Broadcast except Comm	Recognized by all cards except TG-1000 Comm	0xFE

Identifying Controller Configuration

Build Command

In controllers with Tiger Comm firmware version `v1.8` and above, the BUILD X command directed at the COMM card (or without any address) can be used to query axis names, axis types and axis address. (When the build command is addressed to a specific card the build information for that card is returned.)

Example:

```
build x
TIGER_COMM
Motor Axes: X Y P Q R S 0 1
Axis Types: x x u u u u w w
Axis Addr: 1 1 2 2 2 2 3 3
Hex Addr: 31 31 32 32 32 32 33 33
Axis Props: 0 0 0 0 0 0 0 0
```

The above system has card address 1 with an XY stage with axes named X and Y. Card number 2 has micro mirror with axes P, Q, R, S. Then card address 3 with filter wheel IDs 0 and 1.

The next line contains the axis type short code. For example, x means xy stage, u means micro mirror and w means filter wheel. A complete listing of axis types with designations is as follows:

The next two lines contain the addresses in two forms, first the form that is used to prefix Card-Addressed commands and second in hex format.

Finally, any special axis properties are printed (e.g.'' CRISP'' or SCAN capabilities) starting with firmware version `2.8`. The decimal equivalent of a byte (0-255) is printed with the bits of the byte representing the following

Axis Type List

Axis Type Short	Axis Type Long	Description
x	XYMotor	XY stage
z	ZMotor	Z focus motor drive. LS50s, Z scopes etc
p	Piezo	Piezo Focus. ASIs ADEPT, Piezo DAC etc
o	Tur	Objective Turret
f	Slider	Filter Changer
t	Theta	Theta Stage
l	Motor	Generic linear motorized stage, TIRF, SISKIYOU etc
a	PiezoL	Generic linear piezo stage
m	Zoom	Zoom magnification motor axis
u	MMirror	Micro Mirror, Scanner 75 etc
w	FW Filter	Wheel

Axis Type Short	Axis Type Long	Description
s	Shutter	Shutter
g	Logic	Programmable logic card
i	LED card	Multi LED Driver card
b	Lens	Tunable Lens
d	DAC	Digital to Analog converter(DAC)
u	Unknown	Unknown axis type

Axis Properties

Bit 0:	`CRISP` autofocus firmware
Bit 1:	`RING BUFFER` firmware
Bit 2:	`SCAN` firmware
Bit 3:	`ARRAY` firmware or `MM_TARGET` firmware
Bit 4:	`SPIM` firmware v2.82
Bit 5:	`SINGLEAXIS` and/or `MULTIAXIS` firmware v2.82
Bit 6:	`LED` illumination v2.88
Bit 7:	Reserved

Tiger Banner

A banner is printed by the controller on Startup and by the WHO command. It tells the user (and also to any scripts and programs) all the available cards in the system, with their axis characters, axis types etc.

```
At 30: Comm v1.5 TIGER_COMM May 07 2013:15:42:05
At 31: X:XYMotor,Y:XYMotor v2.4 STD_XY Jun 11 2013:17:00:12
At 32: Z:Piezo v2.4 ADEPT_PIEZO Jun 11 2013:17:05:00
```

It is a multiline reply, each line is terminated by a `<Carriage Return>` and final line by a `<Carriage Return> +<Line Feed>` to designate end of Transmission.

Each line can be sub divided into strings using a white space as delimiter. Then the 2nd string is the card address in Hex. `0x30` is `0` in ascii,'' `0x31`'' is `1` and `0x32` is 2.All possible address are `0x30` to `0x39` and then `0x81` to `0xF5`. `0x81` is ü, `0xF5` is ⌡.

The second string can be further subdivided with comma as delimiter. Then the first character of the string is the axis character, colon and what kind of an axis it is. A to Z are all possible axis names, system is case insensitive. Except in case of filter wheels, IDs are integers 0 to 9

Example:

X:XYMotor,Y:XYMotor . X and Y are axis names of a XY stage. Z:Piezo . Z is the axis names of a Piezo focus.

Then the 4th string is the firmware version number. 5th String is our build name, which is an internal designation. The last set of strings are the firmware compile date and time.

A Note Regarding Units

The most common commands including MOVE, MOVREL, HERE, and WHERE use axis units, which can be changed using the UM command. However, some commands such as SETUP, SETLOW, and PCROS always use units of mm. By default, axis units where position is given in distance (e.g. for motorized stages and piezo stages) are represented in 0.1um increments, or 10,000 units per millimeter of travel. For mirror scanner axes, default axis units are 0.001 degrees (uncalibrated), or 1000 units per degree of travel. When a time is required, the unit is generally milliseconds. Some commands use integer codes or other input units as described below.

[1]
Includes using the MOVE or MOVREL commands, ARRAY module, ring buffer, TTL triggers with some exceptions, etc.
[2]
strictly speaking, it will be the closest multiple of the specified distance in encoder units because that is how the move distance is stored internally
[3]
Old text, unknown meaning: TTL Y must be in 0 mode (TTL Y=0) or it might cause an issue.

From:
https://docs.asiimaging.com/ - **Applied Scientific Instrumentation**

Permanent link:
https://docs.asiimaging.com/all_serial_commands

Last update: **2021/09/23 17:16**